M2.3	Part Plans – Mechanical Rooms Mechanical New Work
M2.4	Roof Plan Mechanical New Work
M7.1	Mechanical Details Sheet 1
M7.2	Mechanical Details Sheet 2
M8.1	Automatic Temperature Controls Sheet 1
M8.2	Automatic Temperature Controls Sheet 2
M8.3	Automatic Temperature Controls Sheet 3
M9.1	Mechanical Equipment Notes, Schedules and Legend
P1.1	First floor Plan – Plumbing Demolition
P1.2	Second Floor Plan – Plumbing Demolition
P2.1	First Floor Plan – Plumbing New Work
P2.1	First Floor Plan – Plumbing New Work
P2.2	Second Floor Plan – Plumbing – New Work
P6.1	Flow Diagrams – New Work
P7.1	Details
P7.2	Details
P9.1	General Notes; Equipment Capacities; Schedules and Legend
E0.1	Electrical Legend and Abbreviations
E0.2	Partial Site Plan Electrical Demolition
E0.3	Partial Site Plan Electrical
E1.1	First Floor Plan Electrical Demolition
E1.2	Second Floor Plan Electrical Demolition
E1.3	Roof Plan Demolition
E2.1	First Floor Plan Lighting
E2.2	Second Floor Plan Lighting
E3.1	First Floor Plan Power & Communications
E3.2	Second Floor Plan Power & Communications
E3.3	Roof Plan Electrical
E4.1	Schematic Power Riser Diagrams
E4.2	Schematic Communications System Riser Diagrams
E5.1	Schedules
E6.1	Details
E6.2	Details
E6.3	Details
E3.1	First Floor Plan Power & Communications
E3.2	Second Floor Plan Power & Communications
N-1	Network Wiring Plan
N-1	Network Wiring Plan
N-1	Network Wiring Plan
E3.1	First Floor Plan Power & Communications
E3.2	Second Floor Plan Power & Communications
N-1	Network Wiring Plan

Drawing Index
Project Record Drawings for:

Project: Wellness Center

Number	Title
T	Title Sheet
T-1.1	Title Sheet
C-2.1	Demo/Layout Plans
C-2.2	Grading and Utility Plan
C-2.3	Utility Profiles
C-3.1	Planting Plan
C-4.1	Erosion & Sediment Control Plan
C-4.2	Sedcon Notes
C-5.1	Site Details
C-5.2	Baysaver Standard Detail Sheet
A-0.1	Code Study
D-1.1	Partial First Floor Plan – Demolition
D-1.2	Partial Second Floor Plan – Demolition
A-1.1	First Floor Plan, Area A
A-1.2	First Floor Plan, Area B
A-1.3	Second Floor Plan, Area A & B
A-1.4	Roof Plan and Roof Demolition Plan
A-1.5	Roof Details
A-2.1	Building Elevations
A-3.1	Door and Finish Schedules, Window, Storefront and Curtainwall Schedule
A-3.3	Head Sill and Jamb Details, HM Frame Schedule, Window, Storefront & Curtainwall Details
A-3.5	Wall Types and Wall Termination Details
A-4.1	Sheet Description
A-4.2	Wall Sections
A-4.3	Wall Sections
A-5.1	Stair and Elevator Plans and Sections
A-5.2	Enlarged Toilet Plans and Plan Details
A-6.1	Interior Elevations
A-7.1	Reflected Ceiling Plans and Details
A-9.1	First Floor Furnishing Plan
A-9.2	Second Floor Furnishing Plan
S-1.1	Foundation and Slab on Grade Plan
S-1.2	Second Floor and Roof Framing Plans
S-3.0	General Notes and Typical Details
S-3.1	Sections and Details
S-3.2	Sections and Details
1 of 2	Riser Detail from Residential and Commercial Fire Protection
2 of 2	Second Floor Plan from Residential and Commercial Fire Protection
M2.1	First Floor Plan Mechanical New Work
M2.2	Second Floor Plan Mechanical New Work
M2.3	Part Plans – Mechanical Rooms Mechanical New Work
M2.4	Roof Plan Mechanical New Work
M1.1	First Floor Plan Mechanical Demolition
M1.2	Second Floor Plan Mechanical Demolition
M1.3	Part Plans – Mechanical Rooms Mechanical Demolition
M1.4	Roof Plan Mechanical Demolition
M2.1	First Floor Plan Mechanical New Work
M2.2	Second Floor Plan Mechanical New Work

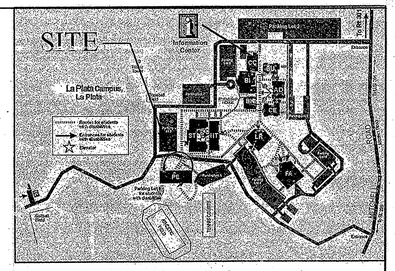

LOCATION PLAN
NO SCALE

NOTE:
THE SPRINKLER HEADS IN FILTER ROOM 182 ARE TO BE REPLACED.

NOTE:
ALL EXISTING UNSPRINKLERED AREAS ARE TO REMAIN UNSPRINKLERED AS PER OUR CONTRACT.

NOTE:
THE EXISTING PIPE AND HEADS IN THE MEN'S LOCKERS 191, MEN'S SHOWER 194, WOMEN'S LOCKERS 193, AND WOMEN'S SHOWER 195 ARE TO REMAIN AS THEY ARE UNLESS OTHERWISE NOTED.

NOTE:
RELOCATED HEADS IN THE EXISTING AREA ARE TO BE 1" PIPE. ALL ADDED PIPE IS TO MATCH EXISTING PIPE AND SCHEDULE. WE WILL TRY TO MATCH ALL ADDED HEADS WITH THE EXISTING HEADS IN THESE AREAS AS BEST AS WE CAN. THIS ALL DEPENDS ON THE HEADS AVAILABILITY.

TOTAL HEAD COUNT

R : RELOCATE PENDENT	= 40
A : ADD PENDENT	= 3
ETR : EXISTING UPRIGHT TO REMAIN	= 25
R : RELOCATE UPRIGHT	= 4
ETR: EXISTING SNIDDE TO REMAIN	= 1
A: ADD UPRIGHT	= 1

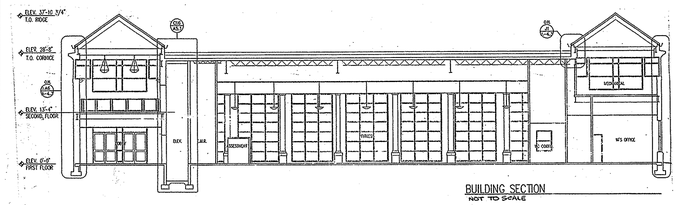

BUILDING SECTION
NOT TO SCALE

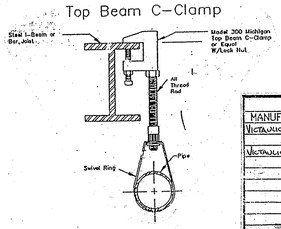

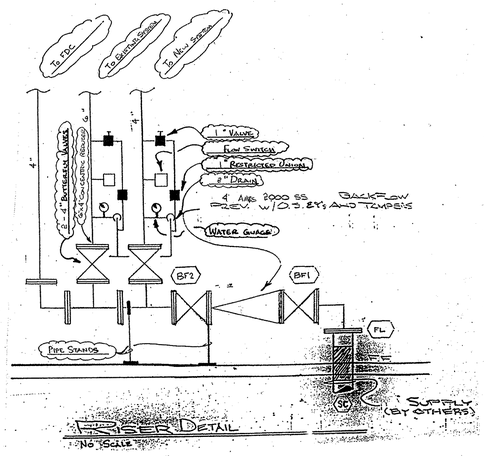

SPRINKLERS

MANUF	TYPE	ORIF	TEMP	FINISH	CANOPY	SYMB	QTY
Victaulic	V2704	½"	155°	Chrome	Pendent	●	18
Victaulic	V2710	½"	155°	Brass	Sidewall	◁	1
					TOTAL THIS SHEET		19

ABBREVIATIONS

BOB	Bottom of Beam
BOD	Bottom of Deck
BOP	Bottom of Pipe
DTL	Detail
HV	Hose Valve
N&C	Nipple and Cap
NIC	Not in Contract
NTS	Not to Scale
OBJ	Open Bar Joist
PRV	Pressure Red. Valve
RM	Roof Manifold
STD	Standpipe
TOB	Top of Beam
TOP	Top of Pipe
TOS	Top of Steel
UON	Unless Otherwise Noted

OWNER:

RESIDENTIAL AND COMMERCIAL FIRE PROTECTION
106 Paul Mellon Ct.
Waldorf, MD 20602
(301) 843-6025

CONTRACT NAME: College of Southern Maryland Wellness Center
CONTRACT WITH: John L. Matingly Construction Co, Inc.
White Plains, Maryland 20695

DESCRIPTION: **PROJECT RECORD DRAWINGS**

OCT 25 2004

SCALE:	1/8"=1'-0"
DRAWN BY:	C.M.
CHECKED BY:	S.B.
DATE:	8-10-04
	CENTER OF THE JOB
	AS-BUILT DRAWING
DRAWING NO.	1 OF 2
CONTRACT NO:	03056

GENERAL NOTES FOR:
CSM Wellness Center addition

1. New wet pipe sprinkler system as shown is designed in accordance with NFPA - 13 (1999 edition) for Light Hazard Occupancy.
2. All new piping 2" and smaller to be sch. 30, Wheatland WLS threaded black steel or equal with threaded cast iron fittings (UON).
3. All new piping 2 ½" and larger will black steel Sch.10 with mechanical tees and grooved fittings (UON).
4. All hanger types, sizes, and locations to be in accordance with NFPA - 13.
5. + 0'- 0" Denotes center line of piping above finished floor.
   * 0'- 0" Denotes center line of piping below top of steel.
   ○ Denotes hydraulic data points.

WATER FLOW INFORMATION

Water for the fire sprinkler system shall come from the swimming pool and gravity fed to a new fire pump (existing to be replaced).

HYDRAULIC CALCULATION SUMMARY WET SYSTEM

This wet system as shown, is designed to discharge at a rate of **.10 GPM / SQ FT** over a **1500 SQ FT** operating area when supplied with water at a rate of **274.2 GPM @ 73.28 PSI** at the street connection (including **0 GPM hose**).
Maximum spacing per sprinkler head is: **196 sq. feet**
Safety factor is **4 PSI**
New addition shall have quick response sprinkler heads.

PIPE SCHEDULE WET SYSTEM

1 Heads on 1" pipe
4 Heads on 1 ¼" pipe
6 Heads on 1 ½" pipe
2 ½" cross and bulk main
6" feed main
6" system riser

NOTE:
ALL EXISTING UNSPRINKLERED AREAS ARE TO REMAIN UNSPRINKLERED AS PER OWR CONTRACT.

NOTE
THE EXISTING PIPE AND HEADS IN THE MECHANICAL ROOM 103 AND OVER THE POOL ARE TO REMAIN AS THEY ARE.

NOTE:
THE EXISTING PIPE AND HEADS IN THE GYMNASIUM, MECHANICAL 220, CLASSROOM 103, ACTIVITY 157, AND ANY OTHER ROOMS BELOW ARE TO REMAIN AS THEY ARE.

NOTE
RELOCATED HEADS IN THE EXISTING AREA ARE TO BE T-FIT. ALL ADDED PIPE IS TO MATCH EXISTING PIPE AND SCHEDULE. WE WILL TRY TO MATCH UP ADDED HEADS WITH THE EXISTING HEADS IN THESE AREAS AS BEST AS WE CAN. THIS ALL DEPENDS ON THE HEADS AVAILABILITY.

TOTAL HEAD COUNT

- (R) = RELOCATE PENDENT = 18
- (A) = ADD PENDENT = 5
- (ETR) = EXISTING UPright TO REMAIN = 24
- (ETR) = EXISTING PENDENT TO REMAIN = 1

TIE INTO EXISTING SYSTEM

SECOND FLOOR PLAN
SCALE: 1/8"=1'-0"

Top Beam C-Clamp

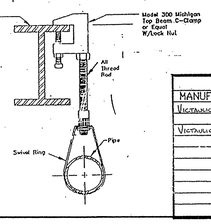

SPRINKLERS

MANUF	TYPE	ORIF	TEMP	FINISH	CANOPY	SYMB	QTY
VICTAULIC	V2708	½"	155°	CHROME	FLUSHCUP/	◉	31
VICTAULIC	V2704	½"	155°	BRONZE	UPRIGHTS	○	25
					TOTAL THIS SHEET		56

ABBREVIATIONS

BOB	Bottom of Beam
BOJ	Bottom of Joist
BOP	Bottom of Pipe
BRTS	Braces
HV	Hose Valve
HC	Hoose and Cap
NIC	Not in Contract
NTS	Not to Scale
OBJ	Open Bar Joist
PRV	Pressure Red. Valve
RM	Roof Manifold
SP	Standpipe
TOB	Top of Beam
TOP	Top of Pipe
TOS	Top of Steel
UON	Unless Otherwise Noted

OWNER:

RESIDENTIAL AND COMMERCIAL FIRE PROTECTION
106 Paul Mellon Ct.
Waldorf, MD 20602
(301) 843-6025

CONTRACT NAME: College of Southern Maryland Wellness Center
CONTRACT WITH: John Mattingly Construction Co. Inc.
White Plains, Maryland 20695
DESCRIPTION: **PROJECT RECORD DRAWINGS**

SCALE: 1/8"=1'-0"
DRAWN BY: C.M.
CHECKED BY: S.B
DATE: 2-13-04
(CENTER OF THE JOB)
AS-BUILT DRAWING
DRAWING NO. 2 OF 2
CONTRACT NO: 03056

RECEIVED OCT 25 2004

© GRIMM AND PARKER,P.C. 2001

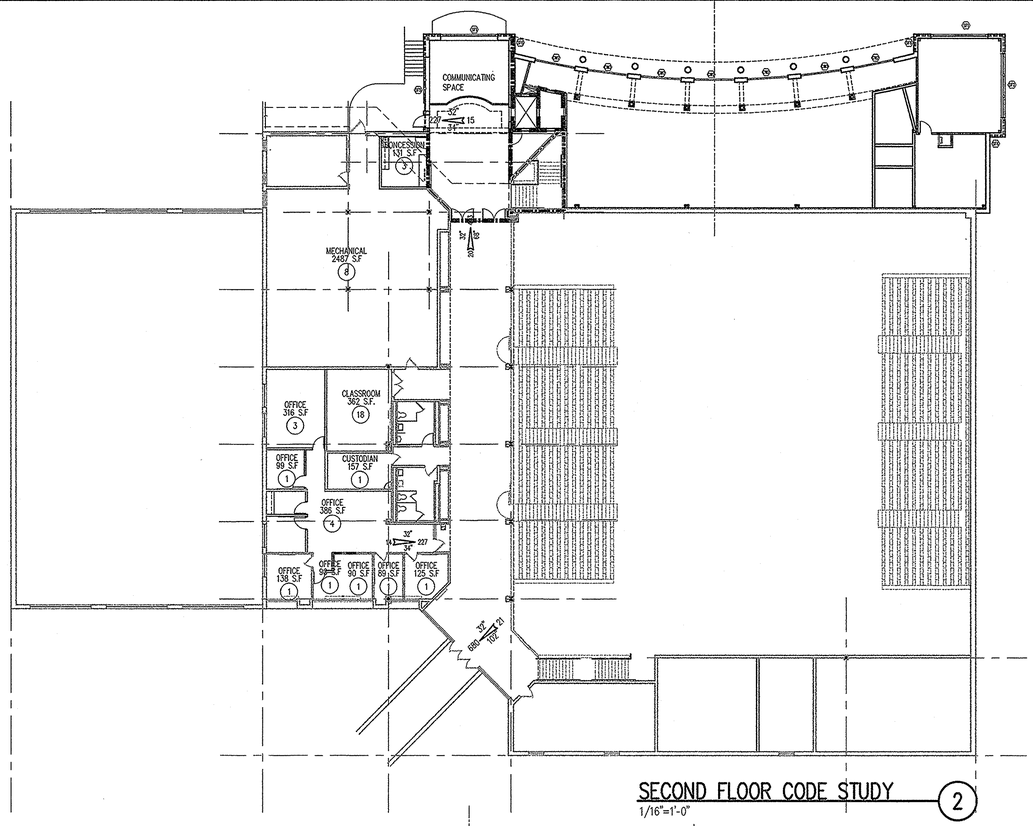

SECOND FLOOR CODE STUDY 2
1/16"=1'-0"

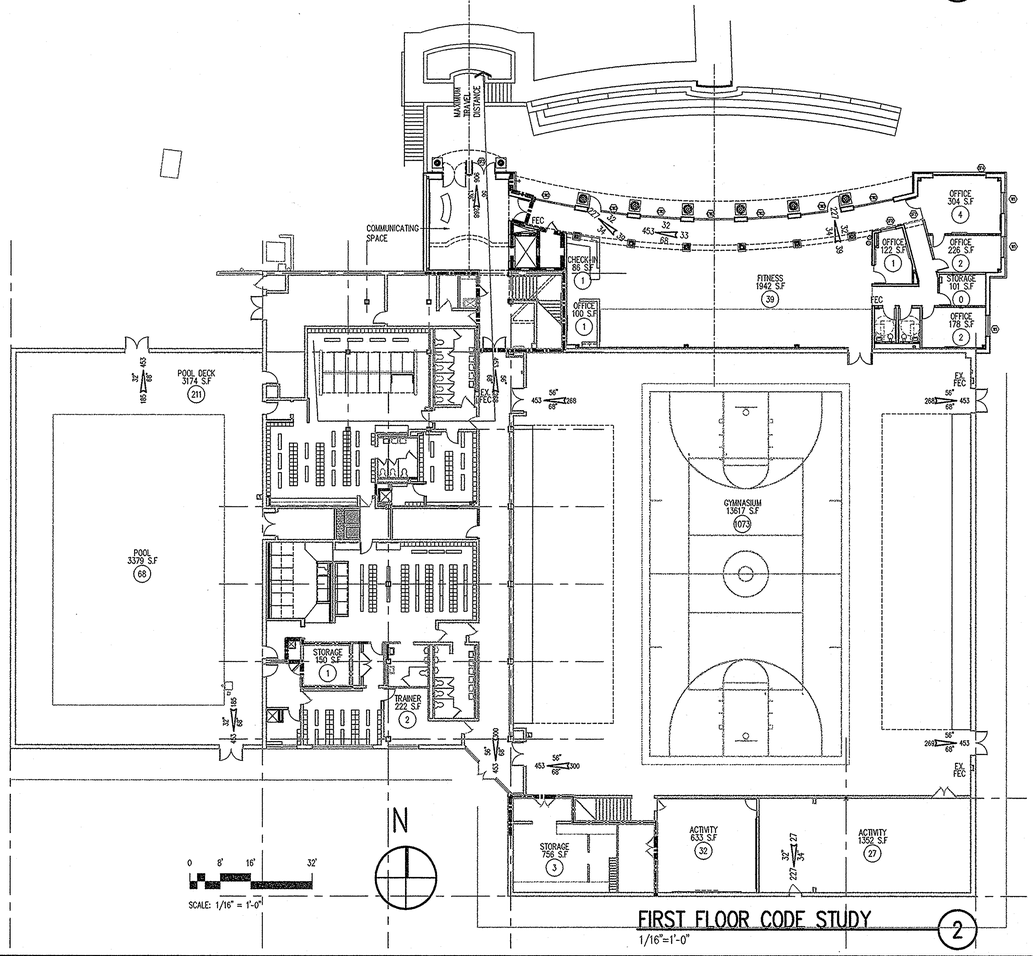

FIRST FLOOR CODE STUDY 2
1/16"=1'-0"

SYMBOL KEY

(#) ROOM OCCUPANCY
REQ'D. WIDTH
ACTUAL # OCC. ALLOWABLE # OCC.
ACTUAL WIDTH

MAX. TRAVEL DISTANCE

3 HOUR RATING
2 HOUR RATING
1 HOUR RATING
1 HOUR RATING

SPACE TO BE ENCLOSED W/ SMOKE PARTITIONS - DOORS SHALL HAVE CLOSERS

ONE HOUR CEILING

FIRE ZONE # 1 (2ND FLOOR)

OCCUPANCY = 26
USE GROUP = A-3
CONSTRUCTION TYPE 2B
NUMBER OF STORIES 2
ACTUAL AREA = 9,317 S.F.

ALLOWABLE AREA 9,500 (503.2)
% INCREASE FOR ACCESS 7,125 (506.2)
INCREASE FOR SPRINKLER 19,000 (506.3)
TOTAL ALLOWABLE AREA = 35,625 S.F.

INCREASE FOR ADDITION TO EXISTING BUILDING
2,295 S.F. (MBRC 5.16.07.02.B)
ADJUSTED TOTAL ALLOWABLE AREA = 37,920 S.F.

FIRE ZONE # 1 (1ST FLOOR)

OCCUPANCY = 1,467
USE GROUP = A-3
CONSTRUCTION TYPE 2B
NUMBER OF STORIES 2
ACTUAL AREA = 37,609 S.F.

ALLOWABLE AREA 9,500 (503.2)
% INCREASE FOR ACCESS 7,125 (506.2)
INCREASE FOR SPRINKLER 19,000 (506.3)
TOTAL ALLOWABLE AREA = 35,625 S.F.

INCREASE FOR ADDITION TO EXISTING BUILDING
8,906 S.F. (MBRC 5.16.07.02.B)
ADJUSTED TOTAL ALLOWABLE AREA = 44,531 S.F.

CODE REVIEW

PROJECT NAME AND LOCATION

SCHOOL	COLLEGE OF SOUTHERN MARYLAND, WELLNESS CENTER
STREET ADDRESS	8730 MITCHELL ROAD
COUNTY	CHARLES COUNTY
CITY, STATE	LA PLATA, MARYLAND

PROJECT DESCRIPTION: RENOVATION TO EXISTING 2 STORY BUILDING AND A 5127 S.F. ONE STORY ADDITION

APPLICABLE CODES

Building Code:	INTERNATIONAL BUILDING CODE 2000
	MARYLAND BUILDING REHABILITATION CODE
Fire Code:	NFPA 101 LIFE SAFETY CODE 2000

BUILDING USE AND CONSTRUCTION CLASSIFICATIONS

			Bldg. Code	Fire Code
Use Group:	E	EDUCATIONAL	305.1	10-1.4
Use Group:	A-3	ASSEMBLY	303.4	9-1.4
Use Group:	B	BUSINESS	304.1	26-1.4

Building Area:

First Floor	37,609 S.F.
Second Floor	9,317 S.F.
Total	46,926 S.F.

Proposed Type of Construction: International Building Code TYPE 2B
Allowable Building Height: 30' + 20' (TABLE 503, 504.2) = 50'
Actual Building Height: 35'-4" MAXIMUM

OCCUPANCY LOADS AND EGRESS REQUIREMENTS

Location Calculated	Area in Sq. Ft.	Sq. Ft. per Person	Occupant Load	Egress Width Required	Egress Width Provided	Number Exits Required	Number Exits Provided
GYMNASIUM	13617	7	1493	224	272	4	4
POOL	6553	50	131	32	136	2	2
ACTIVITY	1999	20	100	32	102	2	2
FITNESS	1361	50	27	32	68	2	2
CLASSROOM	551	20	25	32	34	1	1

FIRE PROTECTION SYSTEM REQUIREMENTS

	System	Bldg. Code	Fire Code
Automatic Sprinklers	YES	903.2, 506.3	7-7
Fire Alarm System	YES	907.2.1	7-6, 9-3.4
Smoke Detection System	NO	--	9-3.5
Partial Smoke Detection	YES	--	5-2.1.8
Location	SMOKE DOORS	--	--

INTERIOR FINISH REQUIREMENTS

Per International Building Code Table 803.4, 804.2 & NFPA Table 10-3.3.1, 10-3.3.2

TRAVEL DISTANCE TO EXITS

	Bldg. Code	Fire Code
Maximum Length of Travel in Fully Sprinklered Building	250' (Table 1004.2.4)	200(9-2.6)
Maximum Length Common Path of Travel	100'	75'(9-2.5.1)
Spaces with One Means of Egress Maximum Travel Distance to an Exit Access Door	75' (Table 1004.2.1)	75'(9-2.5.2)

MINIMUM CORRIDOR WIDTH REQUIREMENTS

Width	Bldg. Code	Fire Code
6 FT., EXIT CORRIDOR	1004.3.2.2	
4 FT., CLR. STAIR WIDTH	1003.2.13.2	5-2.2, 5-3.4

PANIC HARDWARE

Per International Building Code 1003.3.1.9 & NFPA Code 5-2.1.7, 9-2.2.2.3
ALL DOORS SERVING MORE THAN 100 & AT SMOKE BARRIER DOORS

EMERGENCY LIGHTING REQUIREMENTS

Per International Building Code 1003.2.11.2 & NFPA Code 9-2.9
ALL MEANS OF EGRESS

FIRE RATING REQUIREMENTS
STRUCTURAL ELEMENTS
EGRESS COMPONENTS

	Required Rating	Building Code	Fire Code
Exterior Bearing Walls	0	TABLE 601, TABLE 602	TABLE A-6.2.1
Exterior Non-Bearing	0	TABLE 601, TABLE 602	TABLE A-6.2.1
Fire Walls	2	TABLE 601, TABLE 705.4	TABLE A-6.2.1
Interior Bearing Walls	0	TABLE 601, 713	TABLE A-6.2.1
Floor/Ceiling Assemblies	0	TABLE 601	TABLE A-6.2.1
Roof/Ceiling Assemblies	0	TABLE 601	TABLE A-6.2.1
Columns	0	TABLE 601, 713	TABLE A-6.2.1
Beams	0	TABLE 601	TABLE A-6.2.1
Egress Corridors	0	TABLE 1004.3.2.1	10-3.6 (2)
Shafts (Stairs)	1	1005.3.2	6-2.4.4
Shafts Other than Stairs	1	707.4	6-2.4.3
Corridor Doors	0	714	10-3.6(2)
Smoke Barrier Partitions	1	TABLE 601, 709	10-3.7.1??
Smoke Barrier Doors	20 MIN.	709.5, 714	10-3.2.1 (c)??
Mixed Use Separation	1	302.3.3, TABLE 302.3.3	--

EGRESS WIDTH

Width	Bldg. Code	Fire Code
Egress width at stairs	.2"/occ. TABLE 1003.2.3	.3"/occ. 5-3.3.1
Egress width at doors and corridors	.15"/occ. TABLE 1003.2.3	.2"/occ. 5-3.3.1

NUMBER OF REMOTE EXITS REQUIRED

	Bldg. Code	Fire Code
Rooms with Less Than 50 Occupants	1 Exit	1 Exit
Rooms with More Than 50 Occupants	2 Exit (1004.2.1)	2 Exit
Assembly Occupancies:		
Class C: 50-500 Occ.	2 Exit, 1005.2.1	2 Exit, 5-4.1.2
Class B: 501-1,000 Occ.	2 Exit, 1005.2.1	3 Exit
Class A: More Than 1,000 Occ.	2 Exit, 1005.2.1	4 Exit

REMOTENESS OF EXITS:

Life Safety A-5-5.1.4:
1/3 the Length of Maximum Room Diagonal (Credit for Sprinklered Building)

BOCA 1004.2.2.1:
1/3 the Length of Maximum Room Diagonal (Credit for Sprinklered Building)

MAXIMUM DEAD END/DISTANCE:

Bldg. Code	Fire Code
20 FT. (1004.3.2.3)	20 FT. (9-2.5.1)

NOTES

1. Mixed use separation walls shall have 45 minute rated opening protectives.
2. All fire separation walls shall comply with Section 705.4 of the 2000 International Building Code. They shall extend from the top of the fireresistance rated floor/ ceiling assembly below to the underside of the floor or roof slab or deck above and shall be securely attached thereto.
3. All fire walls shall comply with Section 705 of the 2000 International Building Code.
4. Elevator shaft and elevator equipment room to be (1) hour rated - U.L.# U905.
5. Exterior walls indicated to provide (1) hour rating (UL# U906) - Rating to extend 10'-0" from the corner.
6. Stair endspaces are (1) hour rated.
7. Refer to 1/5 plans & coord. w/ MEP drawings for chases thru floor shown thus enclosure wall around these floor opn'gs. shall be (1) hour rated & shall extend from floor tight to deck above - pack w/ safing insulation rating shall be as follows:

   CMU - U.L. #U905
   Gyp. Bd. - Gypsum Assoc. assembly WP1110

PROJECT RECORD DRAWINGS

RECEIVED OCT 25 2004 ONE ASSOC

College of Southern Maryland
Grimm and Parker Architects
1355 Beverly Rd.
Suite 105
McLean VA 22101
703.903.9100
703.903.9755 Fax

I CERTIFY THAT THESE DOCUMENTS WERE PREPARED OR APPROVED BY ME AND THAT I AM A DULY LICENSED ARCHITECT IN THE STATE OF MARYLAND, LICENSE NO. 8080 EXPIRATION DATE 6/10/04.

CODE STUDY
COLLEGE OF SOUTHERN MARYLAND WELLNESS CENTER
LA PLATA, MARYLAND

DATE	DESCRIPTION
4/30/03	BID SET

© GRIMM AND PARKER,P.C. 2001

A-0.1

DGS# - CC-09-MC99-311

20106a01.dwg

© GRIMM AND PARKER P.C. 2001

GENERAL NOTES:

GENERAL NOTE APPLICABLE TO ALL DRAWINGS - ITEMS AND CONDITIONS DETAILED, NOTED OR OTHERWISE IDENTIFIED IN THE SECTIONS OR DETAILS ARE APPLICABLE AND BINDING TO ALL OTHER SECTIONS AND DETAILS FOR IDENTICAL OR SIMILAR CONDITIONS.

1. ALL CONSTRUCTION AND WORK SHOWN ON THE DRAWINGS IS TO BE NEW AND FURNISHED AND INSTALLED BY THE CONTRACTOR.

2. IF A CONFLICT EXISTS IN THE DRAWINGS AND/OR SPECIFICATIONS, CONSULT THE ARCHITECT IMMEDIATELY FOR CLARIFICATION. FOR PURPOSE OF BID, THE MORE STRINGENT AND MORE COSTLY REQUIREMENT SHALL BE ASSUMED TO APPLY.

3. ITEMS SHOWN ON THE DRAWINGS BUT NOT SPECIFIED, SHALL BE FURNISHED AND INSTALLED BY THE CONTRACTOR. IF AN ITEM IS SHOWN ON THE DRAWINGS, BUT IS NOT INCLUDED IN THE SPECIFICATIONS, CONSULT THE ARCHITECT IMMEDIATELY FOR CLARIFICATION. FOR THE PURPOSE OF BID, THE CONTRACTOR SHALL PROVIDE ITEMS AND WORK CONSISTENT WITH THE GENERAL QUALITY LEVEL OF THE CONTRACT REQUIREMENTS.

4. IF AN ITEM IS IDENTIFIED IN THE SPECIFICATIONS AS TO SPECIFIC NUMBER, (I.E., THREE FLAGPOLES, SIX BENCHES, ETC.), BUT LOCATIONS FOR THESE ITEMS ARE
NOT SHOWN ON THE DRAWINGS, CONTRACTOR SHALL PROVIDE SPECIFIED ITEMS AND OTHER WORK REQUIRED FOR THEIR PROPER INSTALLATION, AND CONSULT ARCHITECT FOR CLARIFICATION AS TO LOCATION OF ITEMS.

5. IN THE ABSENCE OF A WRITTEN DIMENSION, OR IN CASE OF DOUBT AS TO THE PROPER MEASUREMENT, CONSULT THE ARCHITECT FOR CLARIFICATION PRIOR TO INSTALLATION OF RELATED WORK.

6. IF AN AREA OR SPACE IS SHOWN, BUT IS NOT CLEARLY DEFINED OR INDICATED BY NOTES, PROVIDE THE SAME MATERIALS AND FINISHES AS SCHEDULED OR DETAILED FOR AREAS OF SIMILAR USE ELSEWHERE IN THE BUILDING.

7. SECTIONS INDICATED ARE INTENDED TO SHOW THE SPECIFIC CONSTRUCTION WHERE REFERENCED AS WELL AS ESTABLISH THE GENERAL CONSTRUCTION DETAILS FOR SECTIONS THROUGHOUT THE PROJECT WHICH DO NOT HAVE SPECIFIC SECTIONS DRAWN. THE MOST SIMILAR SECTIONS SHALL BE ADAPTED TO ANY SECTIONS NOT DETAILED. ANY SPECIFIC QUESTIONS CONCERNING CONSTRUCTION NOT ADEQUATELY COVERED BY THE ABOVE SHOULD BE DIRECTED TO THE ARCHITECT PRIOR TO BID.

8. TYPICAL DETAILS THROUGHOUT THE DRAWING SET SHALL APPLY FOR ALL APPLICABLE CONDITIONS EVEN IF NOT SPECIFICALLY SHOWN OR REFERENCED.

9. IF A CONFLICT EXISTS BETWEEN BEARING HEIGHTS OF STRUCTURAL MEMBERS ON STRUCTURAL DRAWINGS AND IN ARCHITECTURAL DRAWINGS, CONSULT ARCHITECT IMMEDIATELY FOR CLARIFICATION PRIOR TO SUBMISSION OF STRUCTURAL SHOP DRAWINGS.

12. AT ALL OUTSIDE CORNERS OF INTERIOR MASONRY WALLS, COLUMN ENCLOSURES, PIPE CHASES OR OTHER WALL PROJECTIONS, PROVIDE MASONRY UNITS AND/OR GLAZED MASONRY UNITS WITH BULLNOSED (ROUNDED) EDGES WITH 1" RADIUS, UNLESS OTHERWISE NOTED. WHERE MASONRY CORNERS ALIGN WITH BULKHEADS, TRANSITION FROM BULLNOSE CORNER UNITS TO SQUARE.

13. UNLESS SPECIFICALLY NOTED OTHERWISE, ENCLOSE ALL VERTICAL MECHANICAL PIPES, RAIN LEADERS, ETC. WITH A CHASE OF WALL FINISH TO MATCH ADJACENT FINISHES.

14. REFER TO PLANS AND ELEVATIONS FOR LOCATIONS OF CONTROL JOINTS (C.J.) AND EXPANSION JOINTS (E.J.) IN EXTERIOR MASONRY WALLS. IF A CONFLICT EXISTS BETWEEN JOINT LOCATIONS SHOWN ON THE ELEVATIONS AND PLANS, CONSULT THE ARCHITECT FOR CLARIFICATION PRIOR TO CONSTRUCTION. REFER TO FLOOR PLANS FOR LOCATIONS OF CONTROL JOINTS (C.J.) IN INTERIOR MASONRY WALLS, AND ADHERE. TO REQUIREMENTS OF SPECIFICATIONS FOR CONTROL JOINT LOCATIONS AND SPACING.

15. PROVIDE ACCESS PANELS WHERE NECESSARY TO PROVIDE ACCESS TO VALVES, GUAGES, DAMPERS, AND ALL OTHER MECHANICAL PLUMBING OR ELECTRICAL EQUIPMENT CONCEALED WITHIN OR BEHIND CONSTRUCTION.

16. CONDUITS, PLUMBING, DUCTWORK, SPRINKLER LINES AND EQUIPMENT AND ALL OTHER SUCH WORK MUST BE CONCEALED WITHIN WALLS OR ABOVE CEILINGS EXCEPT WHERE SPECIFICALLY NOTED OTHERWISE. CONTRACTOR IS TO PROVIDE BULKHEADS, CHASES, OR OTHER SUCH ENCLOSURES TO CONCEAL ALL SUCH WORK THAT CANNOT BE CONCEALED WITHIN WALLS OR ABOVE CEILINGS. DESIGN OF THESE CHASES AND ENCLSURES IS TO BE COORDINATED WITH THE ARCHITECT.

17. NOT USED

18. ALL APPURTENANCES BUILT INTO OR THROUGH WALLS, INCLUDING DOORS, DUCTS, WINDOWS, LOUVERS, GRILLES, MECHANICAL WORK, ETC. SHALL FIT TIGHT AND BE THOROUGHLY SEALED AROUND PERIMETERS. WORK AT EXTERIOR WALLS SHALL BE FLASHED OR OTHERWISE WATERPROOF SEALED.

19. REFER TO CIVIL, STRUCTURAL, MECHANICAL, ELECTRICAL, PLUMBING, AND KITCHEN DRAWINGS FOR ADDITIONAL GENERAL NOTES PERTAINING TO EACH DISCIPLINE.

20. FIELD VERIFY DIMENSIONS FOR ACCURATE FITTING OF CABINETS, COUNTERS, LOCKERS, DOORS, WINDOWS, FIXTURES, SHELVING, GATES AND OTHER INSTALLATIONS PRIOR TO SHOP OR FACTORY FABRICATION. PROVIDE FILLER STRIPS, SCRIBE STRIPS, BASES, CLOSURE FINISHES AND TRIM FOR A COMPLETE INSTALLATION.

21. PROVIDE APPROPRIATE TRANSITION STRIPS AT CHANGES IN FLOOR MATERIAL.

22. CONTRACTOR SHALL COORDINATE WORK OF ALL TRADES. CONTRACTOR SHALL PROVIDE COORDINATION DRAWINGS FOR WORK OF MECHANICAL, PLUMBING AND ELECTRICAL TRADES TO ENSURE COORDINATION AND FIT OF ALL WORK WITHIN SPACES PROVIDED. IN THE EVENT OF CONFLICT BETWEEN WORK OF DIFFERENT TRADES, OR CONFLICT BETWEEN WORK OF TRADES AND ADEQUACY OF SPACE PROVIDED, CONTRACTOR SHALL CONSULT ARCHITECT FOR CLARIFICATION PRIOR TO INSTALLATION OF ANY WORK.

23. REFER TO PLUMBING, HVAC AND ELECTRICAL DRAWINGS FOR LOCATIONS AND DESCRIPTIONS OF ACCESS PANELS, LOUVER OPENINGS, VENTILATORS, GRILLES, VALVE CABINETS, FIRE DAMPERS OR OTHER APPURTENANCES AFFECTING WALLS, CEILINGS OR FLOORS. PROVIDE NECESSARY LINTELS, SUPPORT AND ANCHORAGE. SEE STRUCTURAL NOTES FOR LINTEL REQUIREMENTS.

24. REFER TO MECHANICAL, PLUMBING AND ELECTRICAL DRAWINGS FOR LOCATIONS OF CONCRETE PADS TO BE PROVIDED BELOW OR AROUND EQUIPMENT. COMPLY WITH MANUFACTURER'S REQUIREMENTS FOR PROVISION OF CONCRETE PADS OR OTHER MEANS OF SUPPORT FOR MECHANICAL, PLUMBING AND ELECTRICAL ITEMS.

25. INSTALL ELECTRIC SWITCHES, OUTLETS, THERMOSTATS, CONTROLS, CLOCKS, SPEAKERS, FLAGPOLE HOLDERS AND OTHER WALL-MOUNTED ACCESSORIES IN LOCATIONS WHICH ARE UNOBSTRUCTED BY CABINETS, COUNTERS, RACKS, DISPLAY BOARDS, FIXTURES, SHELVING OR OTHER FURNISHINGS OR EQUIPMENT DESIGNATED FOR SPACES SHOWN ON DRAWINGS. THESE DEVICES ARE SHOWN ON THE ARCHITECTURAL DRAWINGS TO ALERT OTHER SUB-CONTRACTORS OF THEIR PRESENCE. COORDINATE INSTALLATION WITH THE ELECTRICAL DRAWINGS. ADVISE THE ARCHITECT OF CONFLICTS IN LOCATION OR TYPES OF DEVICES SHOWN PRIOR TO INSTALLATION. DO NOT INSTALL WALL-MOUNTED ITEMS ON, THROUGH OR INTO ANY EQUIPMENT UNLESS INDICATED.

26. MOUNT ELECTRIC SWITCHES, THERMOSTATS AND OTHER ELECTRONIC CONTROLS LOCATED IN THE SAME VICINITY AT THE SAME HEIGHT ABOVE FINISHED FLOOR IN A UNIFORM, ORDERLY FASHION UNLESS NOTED OTHERWISE.

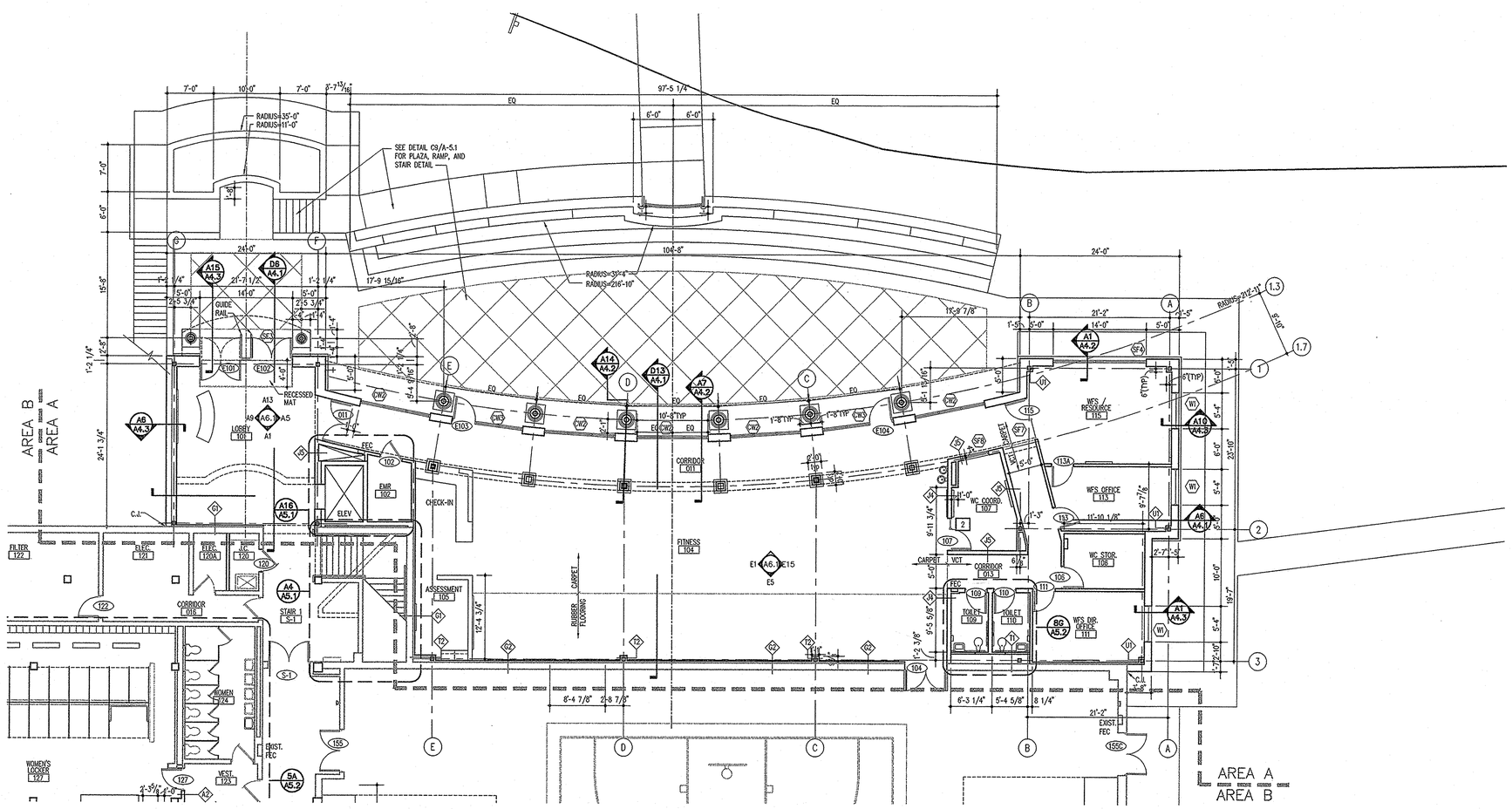

0 4' 8' 16'

SCALE: 1/8" = 1'-0"

N

FIRST FLOOR PLAN, AREA A

1/8"=1'-0"

1

20106A11.DWG

GENERAL PLAN NOTES

(NOTES APPLY TO ALL PLAN SHEETS)

GENERAL NOTE APPLICABLE TO ALL DRAWINGS - ITEMS AND CONDITIONS DETAILED, NOTED OR OTHERWISE IDENTIFIED ON ONE OF THE SECTIONS OR DETAILS ARE APPLICABLE AND BINDING TO ALL OTHER SECTIONS AND DETAILS FOR IDENTICAL OR SIMILAR CONDITIONS.

1. REFER TO SHEET A-3.5 FOR WALL TYPES AS REFERENCED ON PLANS WITH THE DIAMOND SYMBOL. UNLESS REFERENCED OTHERWISE, ALL INTERIOR GYPSUM BOARD WALLS ARE TYPE J1.

2. UNLESS NOTED OTHERWISE, WALLS SHALL EXTEND TO THE ROOF OR FLOOR DECK ABOVE AND BE SEALED IN ACCORDANCE WITH THE WALL TERMINATION DETAILS ON SHEET A-3.5. FIRESTOP WALLS IN ACCORDANCE WITH SPECIFICATION SECTION #07841 THROUGH -PENETRATION FIRESTOP SYSTEMS TO SEAL THE TOPS OF SMOKE BARRIER WALLS, FIRE WALLS, FIRE SEPARATION WALLS AND WALLS WHICH ARE REQUIRED TO RESIST THE PASSAGE OF SMOKE. REFER TO THE CODE STUDY PLAN FOR IDENTIFICATION OF ALL SMOKE AND FIRE WALL CONDITIONS. PERIMETER CORRIDOR AND LOBBY WALLS SHALL BE BUILT TO RESIST THE PASSAGE OF SMOKE. THESE WALLS SHALL BE BUILT TIGHT TO DUCTS, PIPES OR PENETRATIONS AND TOPS SHALL BE SEALED TIGHT TO THE DECK ABOVE. WHERE WALLS ARE INTERRUPTED BY STRUCTURAL MEMBERS, FIRESTOP SPACE BETWEEN TOP OF WALL AND MEMBER AND BETWEEN MEMBER AND DECK ABOVE.

3. EXTERIOR MASONRY WALLS ARE NOT HATCHED FOR CLARITY. REFER TO WALL SECTIONS AND DETAILS FOR EXTERIOR WALL TYPES AND CONSTRUCTION.

4. DIMENSIONS ON PLANS ARE FROM FACE OF MASONRY TO FACE OF MASONRY, FACE OF MASONRY TO FACE OF GYPSUM BOARD OR FACE OF GYPSUM BOARD TO FACE OF GYPSUM BOARD.

5. COLUMN GRID LINES ARE FOR REFERENCE ONLY. REFER TO STRUCTURAL DRAWINGS FOR COLUMN LOCATIONS.

6. REFER TO FURNITURE AND EQUIPMENT PLANS FOR CASEWORK, MILLWORK, DISPLAY BOARDS, SHELVING UNITS, TV MOUNTING BRACKETS, LOCKERS, FURNITURE, ETC. (A-9 SERIES).

7. FEC - INDICATES A FIRE EXTINGUISHER WITH A RECESSED CABINET.
FE - INDICATES A FIRE EXTINGUISHER WITH A WALL MOUNTING BRACKET.

8. UNLESS SPECIFICALLY INDICATED OTHERWISE, THE SAME WALL TYPE NEXT TO A DOOR OR OPENING SHALL CONTINUE OVER THE DOOR OR OPENING.

9. PLAN LOCATION OF DOORS AND FRAMES RELATIVE TO THE PLANE OF THE WALL IS DIAGRAMMATIC ONLY. REFER TO THE REFERENCED JAMB AND HEAD CONDITION DETAILS TO DETERMINE ACTUAL PLACEMENT OF DOOR AND FRAME.

SYMBOL KEY

WALLS ON FINISH SCHEDULE ARE DENOTED THUS:
TYPICAL UNLESS OTHERWISE NOTED.

KEY PLAN

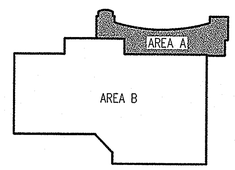

PROJECT RECORD DRAWINGS

RECEIVED
OCT 25 2004
CDE ASSOC.

csm college of southern maryland

Grimm and Parker Architects

1355 Beverly Rd.
Suite 105
McLean VA 22101
703.903.9100
703.903.9755 Fax

I CERTIFY THAT THESE DOCUMENTS WERE PREPARED OR APPROVED BY ME AND THAT I AM A DULY LICENSED ARCHITECT IN THE STATE OF MARYLAND, LICENSE NO. 0050 EXPIRATION DATE 6/10/04.

FIRST FLOOR PLAN, AREA A
COLLEGE OF SOUTHERN MARYLAND WELLNESS CENTER
LA PLATA, MARYLAND

DATE	DESCRIPTION
4/30/03	BID SET

© GRIMM AND PARKER,P.C. 2001

A-1.1

DGS# - CC-09-MC99-311

© GRIMM AND PARKER,P.C. 2001

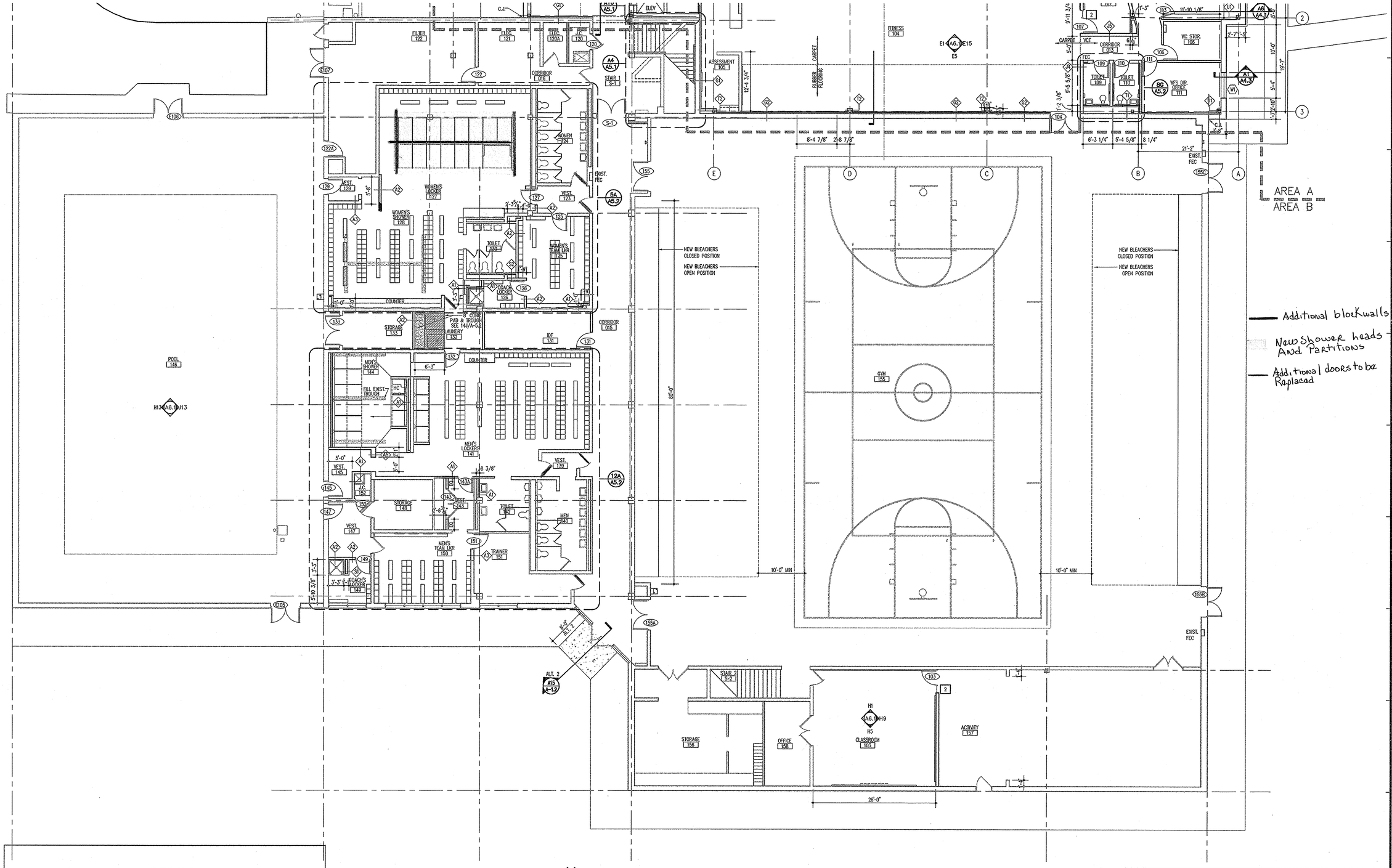

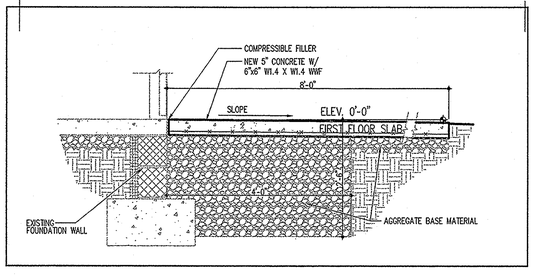

SECTION AT EXISTING ENTRY — A15
3/4"=1'-0"
ALTERNATE 2

SCALE: 1/8" = 1'-0"

FIRST FLOOR PLAN, AREA B — 1
1/8"=1'-0"

KEY PLAN

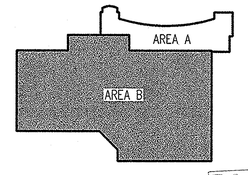

PROJECT RECORD DRAWINGS

RECEIVED OCT 25 2004

20108A12.DWG

college of southern maryland

I CERTIFY THAT THESE DOCUMENTS WERE PREPARED OR APPROVED BY ME AND THAT I AM A DULY LICENSED ARCHITECT IN THE STATE OF MARYLAND, LICENSE NO. 9080 EXPIRATION DATE 6/10/04.

1355 Beverly Rd.
Suite 105
McLean VA 22101
703.903.9100
703.903.9755 Fax

Grimm and Parker Architects

FIRST FLOOR PLAN, AREA B
COLLEGE OF SOUTHERN MARYLAND WELLNESS CENTER
LA PLATA, MARYLAND

DATE	DESCRIPTION
4/30/03	BID SET

© GRIMM AND PARKER,P.C. 2001

A-1.2

DGS# - CC-09-MC99-311

© GRIMM AND PARKER,P.C. 2001

AREA B
AREA A

OPEN TO BELOW

PROVIDE ACCESS TO BUILDING FOR DURATION OF CONSTRUCTION

PROVIDE TEMPORARY ENCLOSURE FOR ACCESS TO BUILDING FOR DURATION OF CONSTRUCTION

GENERATOR 204

MECHANICAL 203

CONCESSIONS 202

LOBBY 201

STORAGE 201A

STAIR 1 S-1

MECHANICAL PENTHOUSE 200

LADDER

SHARED OFFICE 219

SMALL CLASSROOM 205

CORRIDOR 022

CORRIDOR 021

MEN 206

CORRIDOR 092

CUSTODIAN 208

OFFICE 217

VEST. 218

WOMEN 207

MAIL 215

SHARED OFFICE 216

AQUA. MGR. 214

VEST. 209

AQUA. DIR. 213

COORD. 212

FACULTY MGR. 211

OFFICE MGR. 210

ALTERNATE 4

STAIR 2 S-2

MECHANICAL 220

- Additional doors to be Replaced
- Remove Convector
- Birch Cap
- New Steel Gates
- New wall Location

SECOND FLOOR PLAN, AREA A & B
1/8"=1'-0"

0 4' 8' 16'
SCALE: 1/8" = 1'-0"

PROJECT RECORD DRAWINGS

RECEIVED
OCT 25 2004

CSM college of southern maryland

1355 Beverly Rd.
Suite 105
McLean VA 22101
703.903.9100
703.903.9755 Fax

Grimm and Parker Architects

I CERTIFY THAT THESE DOCUMENTS WERE PREPARED OR APPROVED BY ME AND THAT I AM A DULY LICENSED ARCHITECT IN THE STATE OF MARYLAND, LICENSE NO. 9080 EXPIRATION DATE 6/10/04.

SECOND FLOOR PLAN, AREA A & B
COLLEGE OF SOUTHERN MARYLAND WELLNESS CENTER
LA PLATA, MARYLAND

DATE	DESCRIPTION
4/30/03	BID SET

© GRIMM AND PARKER,P.C. 2001

A-1.3

DGS# - CC-09-MC99-311

20105A13.DWG

© GRIMM AND PARKER,P.C. 2001

GENERAL NOTE - APPLICABLE TO ALL DRAWINGS:

ITEMS AND CONDITIONS DETAILED, NOTED OR OTHERWISE IDENTIFIED ON ONE OF THE SECTIONS OR DETAILS ARE APPLICABLE AND BINDING TO ALL OTHER SECTIONS AND DETAILS FOR IDENTICAL OR SIMILAR CONDITIONS.

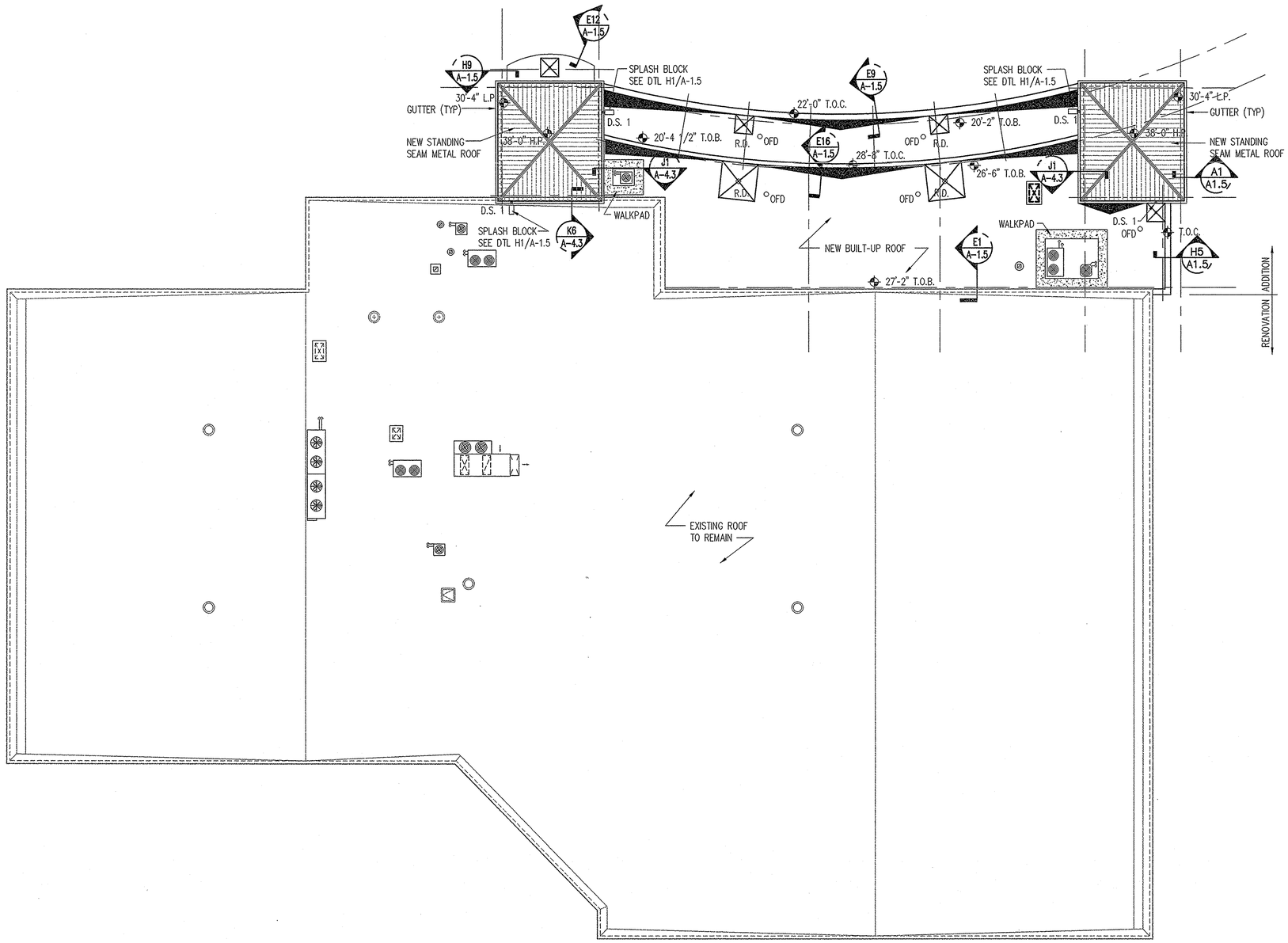

ROOF PLAN
3/32"=1'-0"

1

TYPICAL NOTES

1. MEMBRANE ROOF SLOPE @ ¼" PER FOOT, MIN.
2. SEE SHEET A-1.5 CURB FLASHING DETAIL FOR ALL ROOF TOP MECHANICAL EQUIPMENT. COORDINATE WITH MECHANICAL FOR CURB & EQUIPMENT LOCATIONS.
3. DO NOT LOCATE MECHANICAL UNITS (INCLUDING EXHAUST FANS) WITHIN 10' OF PARAPET.
4. PROVIDE TAPERED INSULATION AT ALL CRICKETS INDICATED TO DRAINS. HOLD BACK CRICKETS BETWEEN DRAINS 2' FROM OUTSIDE EDGE OF DRAIN SUMP.
5. DETAILS INDICATED ARE TYPICAL FOR ALL SIMILAR ROOFING CONDITIONS UNLESS OTHERWISE INDICATED.
6. FIELD PAINT ROOFTOP EQUIPMENT (EXCLUDING PREFINISHED ITEMS), INCLUDING EQUIPMENT WITH PRIMER.
7. PROVIDE WALKWAY PROTECTION AT ALL ROOF LADDERS AND A.H.U.'S.
8. ALL ROOF PENETRATIONS AND ACCESSORIES (DRAINS, VENTS, ETC.) SHALL BE INSTALLED AND FLASHED IN COMPLIANCE WITH THE N.R.C.A. ROOFING AND WATERPROOFING MANUAL (4TH EDITION) AND S.M.A.C.N.A. (ARCHITECTURAL SHEET METAL MANUAL, 5TH EDITION)
9. FOR MEMBRANE ROOFS, PROVIDE TAPERED INSULATION BOARD (EVEN IF NOT SHOWN ON THIS PLAN) TO CREATE POSITIVE DRAINAGE TO ROOF DRAINS AND ELIMINATE AREAS OF POTENTIAL STANDING WATER. MAINTAIN A MINIMUM 1/4" PER FOOT SLOPE TO DRAIN. COORDINATE HEIGHTS OF ALL FLASHINGS AND EXPANSION JOINT CAPS WITH TAPERED INSULATION TO MAINTAIN MINIMUM DIMENSIONS DETAILED.
10. TOP OF ROOF INSULATION IS 1½" ABOVE TOP OF STEEL DECK AT ALL DRAIN RECEIVER SUPPORT POINTS. INSULATION SHALL BE TAPERED DOWN FROM ALL 4 SIDES OF 8'-0" x8'-0" SUMP.
11. WHERE NEW WALL ABUTTS EXISTING EXTEND THRU-WALL FLASHING TO EXISTING WALL AND TURN OUT 90° TO FORM END DAM @ NEW BRICK WYTHE. SEAL OVERLAP & SEAL TO WALL.

SYMBOLS KEY

	ROOF DRAIN WITH TAPERED INSUL - TYP. SUMP SHALL BE 8'-0" x 8'-0"
° OFD	OVERFLOW ROOF DRAIN
←	DIRECTION OF SLOPE FROM HIGH POINT - ROOF SLOPES @ 1/4" PER FOOT, MINIMUM, U.O.N.
- - -	EXPANSION JOINT
T.O.M.	TOP OF MASONRY PARAPET
T.O.B.	TOP OF BEAM
J.B.	JOIST BEARING - MASONRY
	DETAIL @ TOP OF WALL
	DETAIL @ LOW ROOF WALL - FLASHING CONDITION
	ROOF LADDER
	INDICATES ROOFTOP MECHANICAL EQUIPMENT - COORDINATE WITH MECHANICAL DRAWINGS
D.S. 1	4"X4" DOWNSPOUT DOWN TO LOWER ROOF & SPLASHPAN
D.S. 2	4"X4" DOWNSPOUT DOWN TO CAST IRON DOWNSPOUT BOOT AT GRADE - SEE CIVIL DRAWINGS FOR CONNECTION
O.S.	OVERFLOW SCUPPER
	INDICATES SLOPES CREATED BY BUILT UP CRICKETS OF TAPERED INSULATION

PROJECT RECORD DRAWINGS

RECEIVED
OCT 25 2004
FACILITIES

college of southern maryland

1355 Beverly Rd.
Suite 105
McLean VA 22101
703.903.9100
703.903.9755 Fax

Grimm and Parker Architects

I CERTIFY THAT THESE DOCUMENTS WERE PREPARED OR APPROVED BY ME AND THAT I AM A DULY LICENSED ARCHITECT IN THE STATE OF MARYLAND, LICENSE NO. 9080 EXPIRATION DATE 6/10/04.

ROOF PLAN AND ROOF DEMOLITION PLAN
COLLEGE OF SOUTHERN MARYLAND WELLNESS CENTER
LA PLATA, MARYLAND

DATE	DESCRIPTION
4/30/03	BID SET

© GRIMM AND PARKER,P.C. 2001

A-1.4

DGS# - CC-09-MC99-311

20108A14.DWG

© GRIMM AND PARKER,P.C. 2001

GENERAL NOTE - APPLICABLE TO ALL DRAWINGS:

ITEMS AND CONDITIONS DETAILED, NOTED OR OTHERWISE IDENTIFIED ON ONE OF THE SECTIONS OR DETAILS ARE APPLICABLE AND BINDING TO ALL OTHER SECTIONS AND DETAILS FOR IDENTICAL OR SIMILAR CONDITIONS.

SCALE: 1½" = 1'-0"

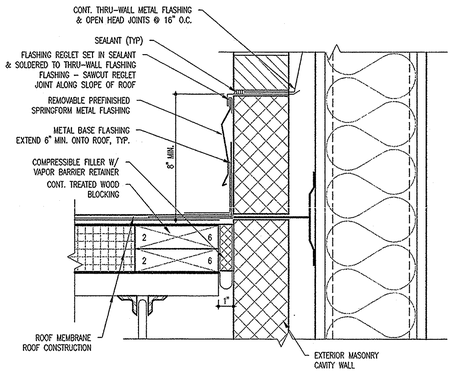

TYPICAL FLASHING DETAIL (H16)
3" = 1'-0"

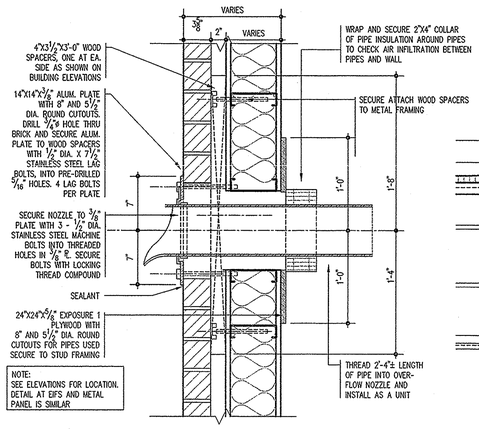

OVERFLOW SCUPPER DETAIL (H12)
1 1/2" = 1'-0"

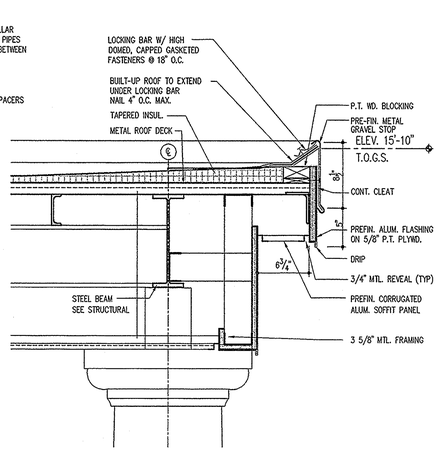

CANOPY EAVE/GRAVEL STOP DETAIL (H9)
1 1/2" = 1'-0"

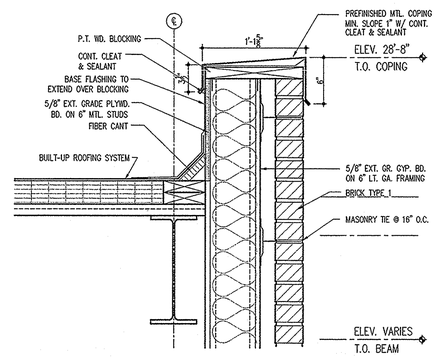

PARAPET DETAIL (H5)
1 1/2" = 1'-0"

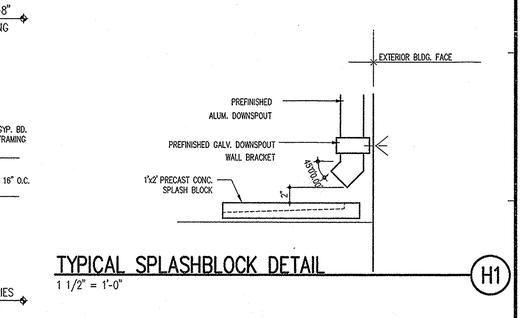

TYPICAL SPLASHBLOCK DETAIL (H1)
1 1/2" = 1'-0"

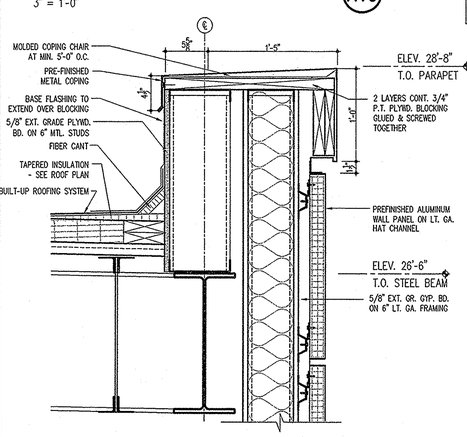

BASE FLASHING / COPING DETAIL (E16)
1 1/2" = 1'-0"

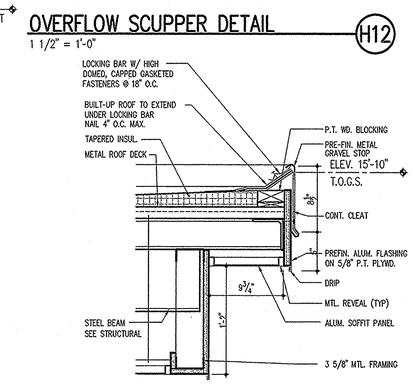

CANOPY EAVE/GRAVEL STOP DETAIL (E12)
1 1/2" = 1'-0"

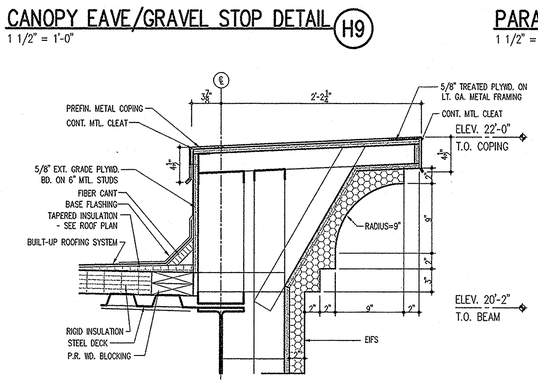

CORNICE/BASE FLASHING DETAIL (E9)
1 1/2" = 1'-0"

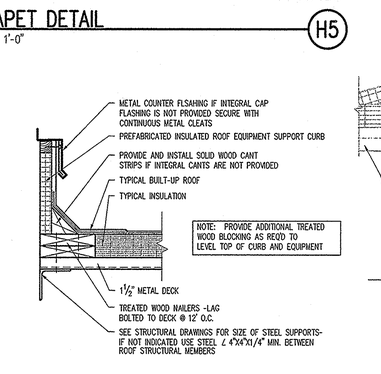

TYPICAL ROOF CURB DETAIL (E5)
1 1/2" = 1'-0"

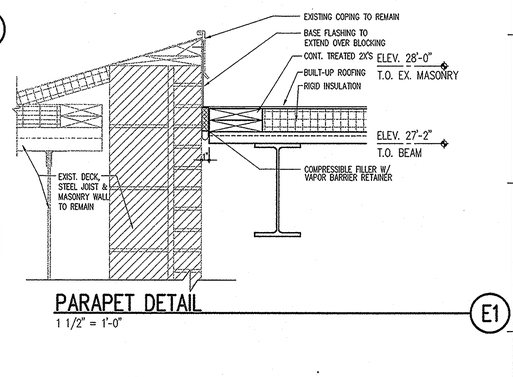

PARAPET DETAIL (E1)
1 1/2" = 1'-0"

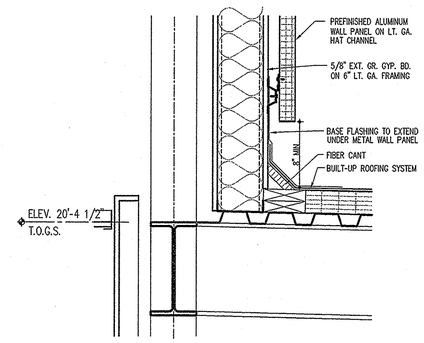

TYPICAL PIPE FLASHING DETAIL (A16)
1 1/2" = 1'-0"
20106s15.dwg

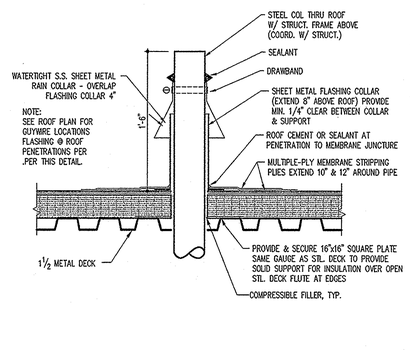

TYPICAL ROOF VENT DETAIL (A12)
1 1/2" = 1'-0"

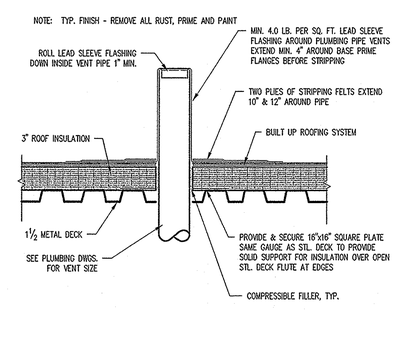

TYPICAL ROOF PENETRATION DETAIL (A9)
1 1/2" = 1'-0"

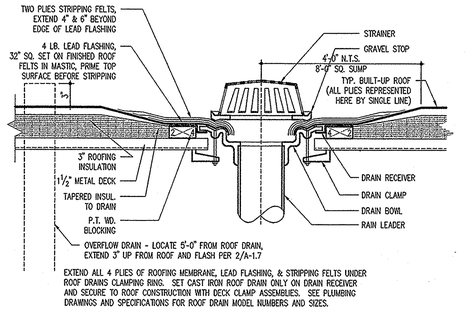

TYPICAL ROOF DRAIN DETAIL (A5)
1 1/2" = 1'-0"

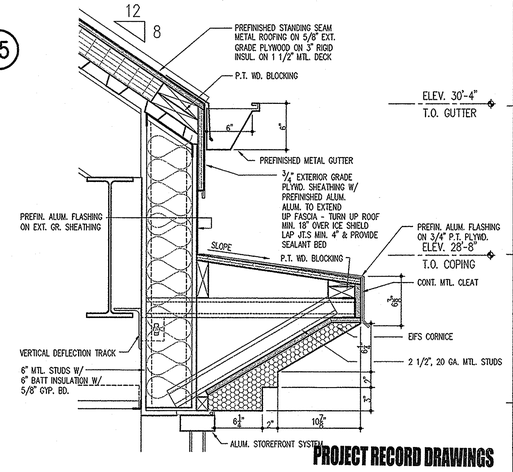

CORNICE AND GUTTER DETAIL (A1)
1 1/2" = 1'-0"

RECEIVED
OCT 25 2004

PROJECT RECORD DRAWINGS

college of southern maryland
Grimm and Parker Architects
1355 Beverly Rd.
Suite 105
McLean VA 22101
703.903.9100
703.903.9755 Fax

I CERTIFY THAT THESE DOCUMENTS WERE PREPARED OR APPROVED BY ME AND THAT I AM A DULY LICENSED ARCHITECT IN THE STATE OF MARYLAND, LICENSE NO. 9080 EXPIRATION DATE 6/10/04.

ROOF DETAILS
COLLEGE OF SOUTHERN MARYLAND WELLNESS CENTER
LA PLATA, MARYLAND

DATE	DESCRIPTION
4/30/03	BID SET

© GRIMM AND PARKER,P.C. 2001

A-1.5

DGS# - CC-09-MC99-311

© GRIMM AND PARKER,P.C. 2001

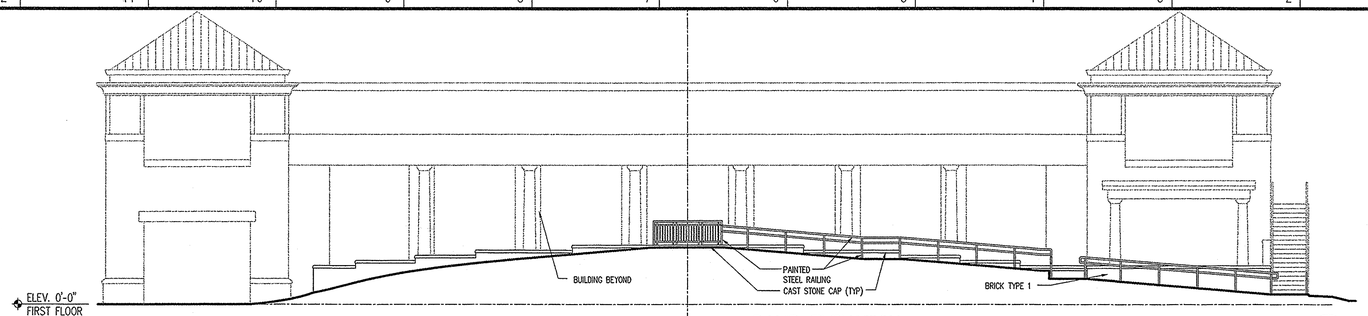

RAMP ELEVATION K1
1/8"=1'-0"

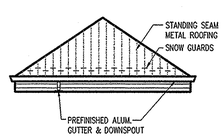

PARTIAL ELEVATION I11
1/8"=1'-0"

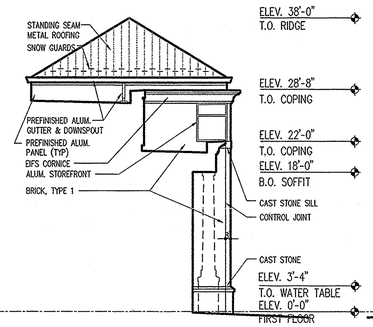

PARTIAL ELEVATION I9
1/8"=1'-0"

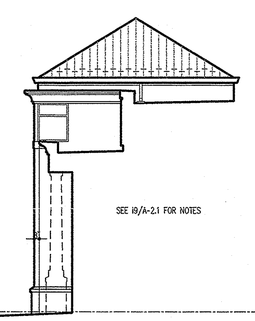

PARTIAL ELEVATION I6
1/8"=1'-0"

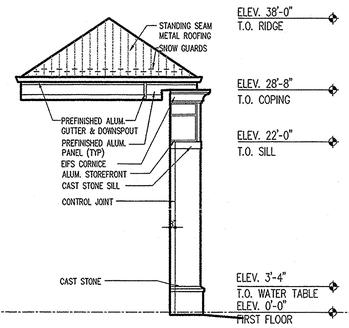

PARTIAL ELEVATION I4
1/8"=1'-0"

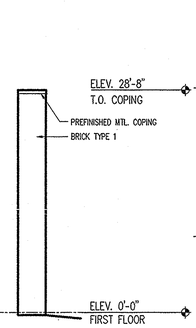

PARTIAL ELEVATION I1
1/8"=1'-0"

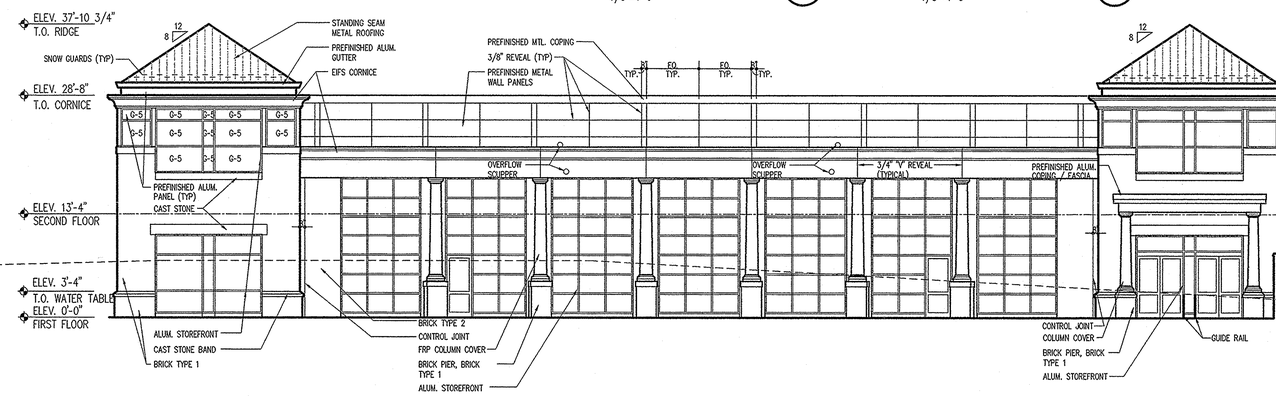

NORTH ELEVATION F1
1/8"=1'-0"

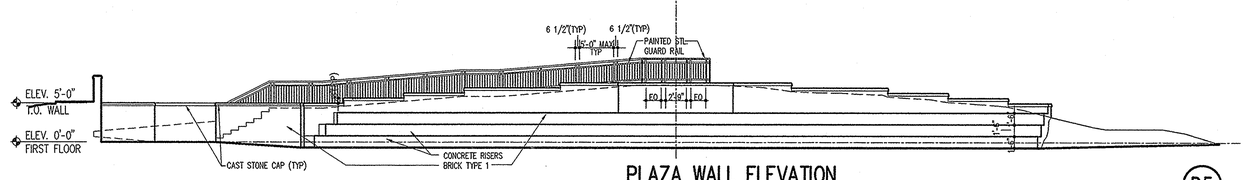

PLAZA WALL ELEVATION D5
1/8"=1'-0"

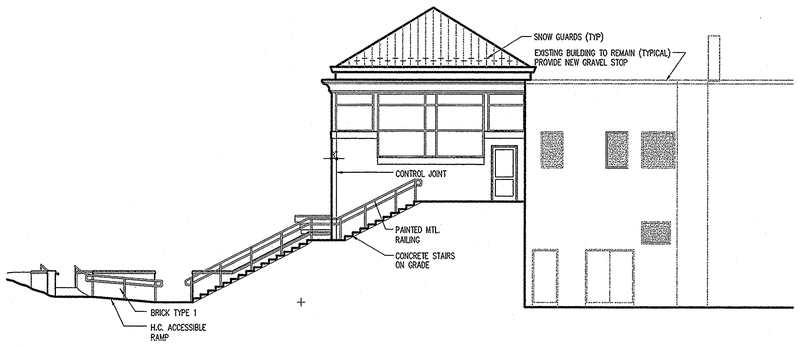

WEST ELEVATION A13
1/8"=1'-0"

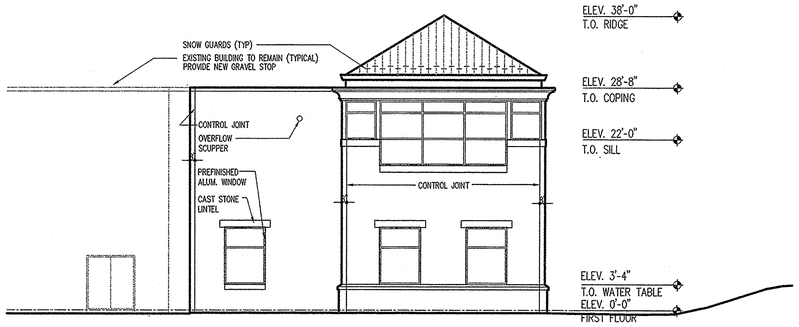

EAST ELEVATION A5
1/8"=1'-0"

ELEVATION NOTES (NOTES APPLY TO ALL ELEVATION SHEETS)

GENERAL NOTE APPLICABLE TO ALL DRAWINGS - ITEMS AND CONDITIONS DETAILED, NOTED OR OTHERWISE IDENTIFIED ON ONE OF THE SECTIONS OR DETAILS ARE APPLICABLE AND BINDING TO ALL OTHER SECTIONS AND DETAILS FOR IDENTICAL OR SIMILAR CONDITIONS.

1. REFER TO STRUCTURAL DRAWINGS FOR FOOTING ELEVATIONS.

2. MASONRY BOND PATTERN SHALL BE RUNNING BOND UNLESS NOTED OR DETAILED OTHERWISE. REFER TO LARGE SCALE ELEVATION DETAILS FOR MASONRY PATTERNS, BONDING, SPECIAL SHAPES AND MORTAR COLOR PATTERNS.

3. PROVIDE SEALANT AT ALL INTERSECTIONS OF DISSIMILAR MATERIALS IN ACCORDANCE WITH SPECIFICATION SECTION #07920 JOINT SEALANTS. ALL EXTERIOR SEALANT SHALL BE A CUSTOM COLOR SELECTED BY THE ARCHITECT. MORE THAN ONE SEALANT COLOR MAY BE SELECTED FOR USE ALONG THE HEIGHT OF THE SAME JOINT TO MATCH ADJOINING MASONRY OR MORTAR.

4. ALL EXTERIOR EXPOSED STEEL SHALL BE FIELD PAINTED UNLESS NOTED OTHERWISE. COLOR AS SELECTED BY THE ARCHITECT.

5. REFER TO TYPICAL ROOF FLASHING DETAILS ON SHEET A-1.5 FOR FLASHING REQUIREMENTS AT LOW ROOF TO WALL CONDITIONS.

6. REFER TO SHEET A-5.2 FOR TYPICAL EXTERIOR CONTROL JOINTS.

KEY PLAN

PROJECT RECORD DRAWINGS

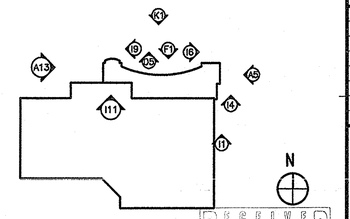

RECEIVED
OCT 25 2004

College of Southern Maryland
1355 Beverly Rd.
Suite 105
McLean VA 22101
703.903.9100
703.903.9755 Fax

I CERTIFY THAT THESE DOCUMENTS WERE PREPARED OR APPROVED BY ME AND THAT I AM A DULY LICENSED ARCHITECT IN THE STATE OF MARYLAND, LICENSE NO. 6080 EXPIRATION DATE 6/10/04.

Grimm and Parker Architects

BUILDING ELEVATIONS
COLLEGE OF SOUTHERN MARYLAND WELLNESS CENTER
LA PLATA, MARYLAND

DATE	DESCRIPTION
4/30/03	BID SET

© GRIMM AND PARKER,P.C. 2001

A-2.1

DGS# - CC-09-MC99-311

20106A21.DWG

© GRIMM AND PARKER,P.C. 2001

FINISH SCHEDULE

RM. NO.	SPACE	COLOR SCHEME	FLOOR	BASE	WALLS A	WALLS B	WALLS C	WALLS D	CLG. MATL.	REMARKS
011	CORRIDOR		CPT2	CPT2	•	•	•	•	•	
013	CORRIDOR		•	•	•	•	•	•	•	
015	CORRIDOR		•	•	•	•	•	•	•	
016	CORRIDOR		EX	EX	EX	EX	EX	EX	EX	
101	LOBBY		PCT	PCT	•/AP-1	•/AP-1	•	•/AP-1	•	
102	ENR		•	•	•	•	•	•	•	
103	CLASSROOM		•	•	•	•	•/AP-1	•/AP-1	•	
104	FITNESS		SPORT/CP2	RBR2/•	•	•/AP-1	•/AP-1	•/AP-1	•	
105	ASSESSMENT		CPT2	•	•	•	•	•	•	
106	WC STOR.		•	•	•	•	•	•	•	
107	WC COORD.		CPT	•	•	•	•	•	•	
109	TOILET		RES	RES	•	•	•	•	•	
110	TOILET		RES	RES	•	•	•	•	•	
111	WFS DIR. OFFICE		CPT	•	•	•	•	•	•	
113	WFS OFFICE CENTER		CPT	•	•	•	•	•	•	
115	WFS / RESOURCE		CPT	•	•	•	•	•	•	
120	J.C.		EX	EX	•	•	•	•	EXP	
121	ELEC.		EX	EX	EX	EX	EX	EX	EX	
122	FILTER		EX	EX	EX	EX	EX	EX	EX	
123	VEST.		•	•	•	•	•	•	•	
124	WOMEN		RES	CT	•/CT	•/CT	•/CT	•/CT	-	5
125	WOMEN'S TEAM LKR		RES	RES	•	•	•	•	-	
126	COACH LOCKER		RES	RES	•	•	•	•	-	
127	WOMEN'S LOCKER		RES	RES	•	•	•	•	-	
128	WOMEN'S SHOWER		RES	RES	•	•	•	•	-	
129	VEST.		RES	RES	•	•	•	•	•	
130	TOILET		RES	CT	•/CT	•/CT	•/CT	•/CT	•	5
131	IDF		•	•	•	•	•	•	EXP	
132	LAUNDRY		•	•	•	•	•	•	•	
133	STORAGE		•	•	•	•	•	•	•	
139	VEST.		•	•	•	•	•	•	•	
140	MEN		RES	CT	•/CT	•/CT	•/CT	•/CT	-	5
141	MEN'S LOCKERS		RES	RES	•	•	•	•	-	
142	TOILET		RES	CT	•/CT	•/CT	•/CT	•/CT	-	5
143	VEST.		RES	RES	•	•	•	•	•	
144	MEN'S SHOWER		RES	RES	•	•	•	•	-	
145	VEST.		RES	RES	•	•	•	•	•	
146	POOL		RES2	RES2	•	•/AP-1	•	•/AP-1	EX	
147	VEST.		RES	RES	•	•	•	•	-	
148	STORAGE		•	•	•	•	•	•	EX	
149	COACH'S LOCKER		RES	RES	•	•	•	•	-	
150	MEN'S TEAM LKR		RES	RES	•	•	•	•	•	
151	TRAINER		•	•	•	•	•	•	•	
152	J.C.		•	•	•	•	•	•	EXP	
155	GYM		SPORT2	NONE	•	•	•	•	EXP	
156	STORAGE		EX	EX	EX	EX	EX	EX	EX	
157	ACTIVITY		CPT2	•	•	•	•	•	EXP	
158	OFFICE		EX	EX	EX	EX	EX	EX	EX	
S-1	STAIR 1		PCT	PCT	•	•	•	•	•	
S-2	STAIR 2		EXIST	EXIST	•	•	•	•	EX	
021	CORRIDOR		•	•	•	•	•	•	•	
022	CORRIDOR		•	•	•	•	•	•	•	
201	LOBBY		PCT	PCT	•	•	•	•	•	
202	CONCESSIONS		•	•	•	•	•	•	•	6
203	MECHANICAL		EX	EX	EX	EX	EX	EX	EXP	
204	GENERATOR		EX	NONE	•	•	•	•	EXP	
205	SMALL CLASSROOM		•	•	•	•	•	•	•	8
206	MEN		RES	CT	•/CT	•/CT	•/CT	•/CT	•	5
207	WOMEN		RES	CT	•/CT	•/CT	•/CT	•/CT	•	5
208	CUSTODIAN		EX	EX	EX	EX	EX	EX	EX	8
209	VEST.		CPT	•	•	•	•	•	•	8
210	OFFICE MGR.		CPT	•	•	•	•	•	•	8
211	FACILITY MGR.		CPT	•	•	•	•	•	•	8
212	COORD.		CPT	•	•	•	•	•	•	8
213	AQUA DIR.		CPT	•	•	•	•	•	•	8
214	AQUA. MGR.		CPT	•	•	•	•	•	•	8
215	MAIL		CPT	•	•	•	•	•	•	8
216	SHARED OFFICE		CPT	•	•	•	•	•	•	8
217	OFFICE		CPT	•	•	•	•	•	•	8
218	VEST.		CPT	•	•	•	•	•	•	8
219	SHARED OFFICE		CPT	•	•	•	•	•	•	8
220	MECHANICAL		EX	EX	EX	EX	EX	EX	EX	

DOOR SCHEDULE

OPNG. NO.	DOOR NOMINAL SIZE WIDTH	HEIGHT	THK.	DOOR TYPE	DOOR MATL.	FRAME MATL.	FRAME TYPE	FRAME SECTIONS JAMB	HEAD	SILL	DOOR LABEL FIRE RATING	HDW SET	REMARKS (SEE NOTES)
011	2'-3'-0"	8'-0"	•	-	ALUM.	ALUM.	SF9			•	•	12	2,19
102	•	•	•	•	•	•	•	•	•	•	1 HR	7	-
103	•	6'-8"	•	•	•	•	•	•	•	•	•	5	-
104	•	•	•	•	•	•	•	JI1	S1 SIM	•	10	18	
106	•	•	•	•	•	•	•	•	•	•	•	3	-
107	•	•	•	•	•	•	2	•	•	•	•	1	-
109	•	•	•	•	•	•	•	•	•	S3	•	4	-
110	•	•	•	•	•	•	•	•	•	S3	•	4	-
111	•	•	•	•	•	•	•	•	•	S5	•	1	-
113	•	•	•	HG	•	•	•	•	•	S5	•	1	-
113A	•	•	•	HG	•	•	•	•	•	•	•	1	-
115	•	8'-0"	•	-	ALUM.	ALUM.	SF7				•	8	19
120	•	•	•	•	•	•	•	•	•	•	•	7	-
122	•	6'-8"	•	•	FRP	ALUM	•	H1	J1	•	•	3	-
122A	•	6'-8"	•	•	FRP	ALUM	•	H1	J1	•	•	17	-
125	•	6'-8"	•	•	•	•	•	H1	J1	•	•	11	-
126	•	6'-8"	•	•	•	•	•	H1	J1	•	•	1	-
127	•	6'-8"	•	•	•	•	•	H1	•	•	•	11	-
129	•	6'-8"	•	•	FRP	ALUM	•	H1	•	•	•	11	-
131	•	6'-8"	•	•	•	•	•	•	•	•	•	6	-
132	•	6'-8"	•	•	•	•	•	H1	•	•	•	2	-
133	2'-3'-0"	6'-8"	•	•	FRP	ALUM	•	H1	•	•	•	18	-
143	2'-3'-0"	6'-8"	•	•	•	•	•	•	•	•	•	9	-
143A	•	6'-8"	•	•	•	•	•	•	•	•	•	11	-
145	•	6'-8"	•	•	FRP	ALUM	•	H1	•	•	•	11	-
147	•	6'-8"	•	•	FRP	ALUM	•	H1	•	•	•	11	-
149	•	6'-8"	•	•	•	•	•	H1	•	•	•	1	-
151	•	6'-8"	•	•	•	•	•	H1	•	•	•	1	-
152	•	•	•	•	•	•	•	•	•	•	•	2	-
155	2'-3'-0"	6'-8"	•	NV	•	•	•	H1	•	•	•	16	-
155A	2'-3'-0"	6'-8"	•	NV	•	•	•	H1	•	•	•	16	-
155B	2'-3'-0"	6'-8"	•	NV	HM	•	•	H1	•	•	•	25	-
155C	2'-3'-0"	6'-8"	•	NV	HM	•	•	H1	•	•	•	25	-
S-1	2'-3'-0"	6'-8"	•	FG2	•	•	•	JI2	•	•	•	15	-
E101	2'-3'-0"	8'-0"	•	-	ALUM.	ALUM.	SF3				•	24	5,19
E102	2'-3'-0"	8'-0"	•	-	ALUM.	ALUM.	SF3				•	24	5,19
E103	•	8'-0"	•	-	ALUM.	ALUM.	CW3				•	21	19
E104	•	8'-0"	•	-	ALUM.	ALUM.	CW3				•	21	19
E105	2'-3'-0"	•	•	NV	FRP	ALUM	•	•	JI2	•	•	20	11
E106	2'-3'-0"	•	•	NV	FRP	ALUM	•	•	JI2	•	•	20	11
E107	•	•	•	•	FRP	ALUM	•	•	JI2	•	•	19	-
021	2'-3'-0"	8'-0"	•	•	•	3	•	•	•	•	•	14	2
021A	2'-3'-0"	8'-0"	•	•	•	3	•	•	•	•	•	14	2
200	•	•	•	•	•	•	•	•	•	•	•	26	-
201A	•	•	•	•	•	•	•	•	•	•	•	3	-
202	•	•	•	•	•	•	•	•	•	S3	•	6	-
202A	5'-0"	4'-0"	-	S	-	ALUM.	-	-	-	-	•	-	16, SEE DETAIL JI4/A-7.1
203A	•	6'-8"	•	•	•	•	•	•	•	•	•	5	-
205	•	6'-8"	•	•	•	•	•	•	•	•	•	11	-
212	•	6'-8"	•	•	•	•	•	H1	JI	•	•	1	17
214	•	6'-8"	•	•	•	•	•	•	•	•	•	1	17
215	•	6'-8"	•	•	•	•	•	•	•	•	•	1	17
217	•	6'-8"	•	•	•	•	•	•	•	•	•	1	17
219	•	6'-8"	•	•	•	•	•	•	•	•	•	1	17
E201	•	8'-0"	•	-	ALUM.	ALUM.	SF10 SIM				•	21	-

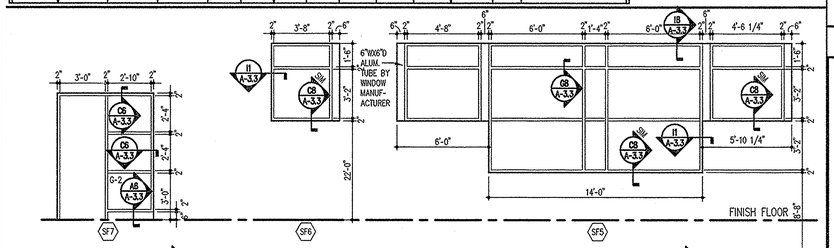

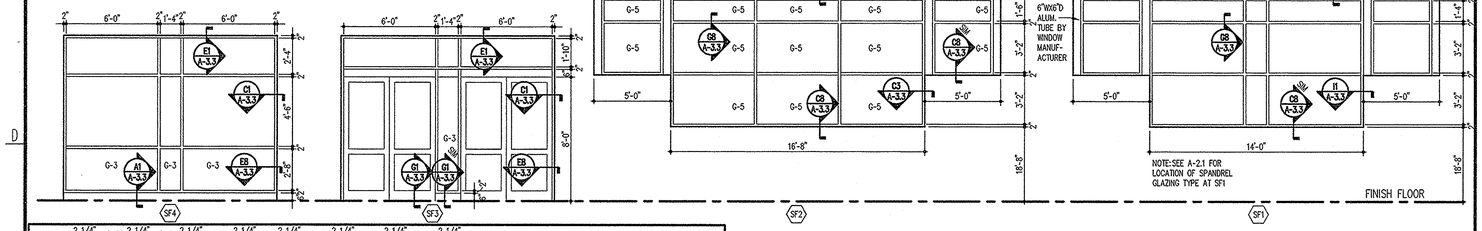

STOREFRONT SCHEDULE

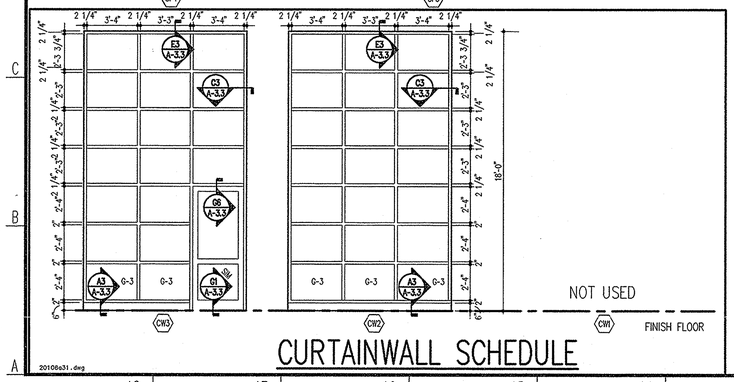

CURTAINWALL SCHEDULE

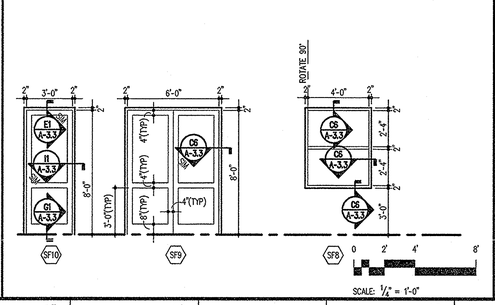

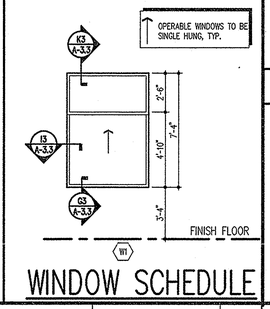

WINDOW SCHEDULE

TYPICAL DETAILS

ALL DETAILS NOTED WITH A ASTERISK (•) IN THE SCHEDULE DENOTE THE TYPICAL DETAILS LISTED BELOW. DOORS NOT LISTED ON THE SCHEDULE SHALL HAVE THE TYPICAL DETAILS LISTED BELOW.

DOOR:
- WIDTH: 3'-0"
- HEIGHT: 7'-0"
- THICKNESS: 1 3/4"
- TYPE: F
- MATERIAL: SCWD

FRAME:
- MATERIAL: HM
- TYPE: 1
- JAMB: J2
- HEAD: H2
- SILL: NONE
- DOOR LABEL: NONE

TYPICAL DOOR NOTES

1. COORDINATE AND PROVIDE HARDWARE AS DETAILED IN THE SPECIFICATIONS OR, IF NOT SPECIFIED, PROVIDE HARDWARE (OF EQUAL QUALITY TO THAT SPECIFIED, AND MOST SIMILAR IN FUNCTION TO TYPE OF DOOR) REQUIRED FOR DOORS TO OPERATE AND APPEAR AS INTENDED ON DRAWINGS.
2. PROVIDE BRUSHED STAINLESS STEEL KICK PLATES ON PUSH SIDE OF DOORS WITH PUSH BARS AND/OR CLOSER DEVICES. KICK PLATE SHALL BE INSET 1/2" FROM EACH SIDE OF DOOR, AND MAXIMUM 8" HIGH OR 1/2" BELOW EDGE OF GLASS LIGHT (IF PRESENT).
3. PROVIDE EXPOSED HARDWARE WITH BRUSHED-IN FINISH AND "SILVER" METALLIC IN COLOR (ALUMINUM, CHROME, OR STEEL).
4. WHEN EXPOSED CLEAR FINISHED WOOD DOORS ARE PAIRED, TAKE CARE TO SELECT MATCHING GRAIN TYPE AND COLOR FOR EACH DOOR IN PAIR.
5. IF CONFLICT EXISTS BETWEEN DOOR RATING AS SCHEDULED AND WALL/PARTITION TYPE FIRE RATING AS SHOWN ON PLANS, PROVIDE DOOR(S) WITH THE GREATER FIRE RATING OF THE TWO.
6. VERIFY ALL DIMENSIONS AND CLEARANCES, AND COORDINATE UNDERCUTTING REQUIRED TO CLEAR ADJACENT FLOOR MATERIALS.
7. SEE SHEET A-3.3 FOR HEAD, JAMB AND SILL DETAILS UNLESS ANOTHER SHEET IS NOTED ON SCHEDULE.
8. SEE SHEET A-3.3 FOR FRAME TYPES. (BOTH H.M. AND ALUM. STOREFRONT) AND GLASS TYPE KEY.
9. IF A DISCREPANCY EXISTS BETWEEN THE DOOR SCHEDULE REMARKS AND THE HARDWARE SCHEDULE IN THE SPECIFICATIONS, PROVIDE THE HARDWARE NEEDED TO MEET THE MORE STRINGENT OF THE REQUIREMENTS.
10. SEE SPECIFICATIONS FOR SCHEDULED HARDWARE SETS. SEE SPECIFICATIONS FOR HARDWARE SETS INDICATED FOR PACKAGED DOOR SYSTEM.
11. PROVIDE CONTINUOUS WEATHERSTRIPPING AND DOOR BOTTOM SEALS AT EXTERIOR DOORS AS SPECIFIED.
12. REFER TO CODE STUDY SHEET A-0.1 FOR STORAGE ROOMS REQUIRING DOORS WITH CLOSERS - ROOMS ARE INDICATED TO BE ENCLOSED WITH SMOKE PARTITIONS.

NOTES FOR REMARKS COLUMN

1. PROVIDE SOUND RATED DOOR WITH CONTINUOUS ACOUSTIC SOUND SEAL WITH DROP SEAL AT DOOR BOTTOM - SEE SPECIFICATIONS.
2. DOOR (S) W/ ELECTRO-MAGNETIC HOLD OPEN DEVICE; CONNECTED TO FIRE ALARM SYSTEM - SEE ELECTRICAL DRAWINGS.
3. PACKAGED DOOR SYSTEM - SEE SPEC. SECTION 08250.
4. PROVIDE POLYCARBONITE GLAZING AT DOOR & SIDELIGHTS.
5. PROVIDE AUTOMATIC DOOR OPERATOR SYSTEM.
6. OVERHEAD COILING DOOR.
7. MULTIPLE SETS OF DOORS SHARE ONE FRAME.
8. PROVIDE 180° HINGES.
9. DOUBLE ACTING DOORS.
10. PROVIDE LIGHT SEALS - ALL SIDES, TOP AND BOTTOM.
11. ALARMED EMERGENCY EXIT HARDWARE.
12. SECURITY SYSTEM DOOR SWITCH AT HM FRAME. COORDINATE WITH ELECTRICAL.
13. 5/8" DOOR UNDERCUT.
14. PROVIDE FLUSH BOLTS AT INACTIVE LEAF.
15. PROVIDE DOORS WITH INSULATED CORE.
16. PART OF ALTERNATE 1
17. PART OF ALTERNATE 4
18. ATHLETIC WALL PAD MOUNTED TO FULL SIZE OF DOOR ON GYM SIDE
19. SEE STOREFRONT SCHEDULE FOR DOOR AND DOOR LITE DIMENSIONS

DOOR ELEVATIONS

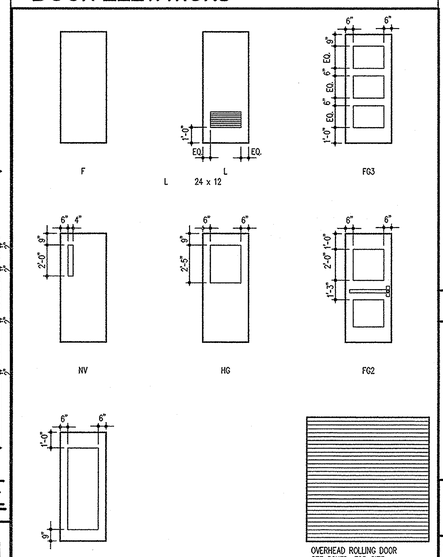

NOTES:
1. PROVIDE GLASS TYPE G-7 AT ALL RATED DOORS, TYPICAL.
2. PROVIDE GLASS TYPE G-2 AT ALL INTERIOR DOORS, TYPICAL.
3. PROVIDE GLASS TYPE G-3 AT ALL EXTERIOR DOORS, TYPICAL.

GLASS TYPE KEY

- G-1 1/4" CLEAR FLOAT GLASS
- G-2 1/4" CLEAR TEMPERED GLASS
- G-3 1" INSULATING GLASS: CONSISTING OF
  - 1/4" TEMPERED GLASS, EXTERIOR LITE
  - 1/2" AIR SPACE, AND
  - 1/4" TEMPERED GLASS WITH LOW E COATING
- G-4 1" INSULATING GLASS: CONSISTING OF
  - 1/4" GLASS, EXTERIOR LITE
  - 1/2" AIR SPACE, AND
  - 1/4" GLASS WITH LOW E COATING
- G-5 1" INSULATING SPANDREL GLASS: CONSISTING OF
  - 1/4" TEMPERED GLASS, EXTERIOR LITE,
  - 1/2" AIR SPACE, AND
  - 1/4" TEMPERED GLASS, W/ OPACIFIER ON AIR SPACE SIDE
- G-6 1" INSULATING GLASS: CONSISTING OF
  - 1/4" TEMPERED GLASS, EXTERIOR LITE
  - 1/2" AIR SPACE, AND
  - 1/4" TEMPERED GLASS
- G-7 1/4" WIRE GLASS

UNLESS NOTED OTHERWISE

1. ALL LITES AT INTERIOR GLAZED OPENINGS TO BE G-1 UNLESS OTHERWISE NOTED
2. ALL LITES AT EXTERIOR GLAZED OPENINGS TO BE G-4 UNLESS OTHERWISE NOTED
3. ALL LITES IN FIREWALLS OR RATED DOORS SHALL BE G-7

TYPICAL FINISHES

ALL FINISHES NOTED WITH AN ASTERISK (•) IN THE SCHEDULE DENOTE THE TYPICAL FINISHES LISTED BELOW. SPACES NOT LISTED ON THE SCHEDULE SHALL HAVE THE TYPICAL FINISHES LISTED BELOW.

- FLOORS: VCT
- BASE: VNL
- WALLS: PTD
- CEILING: SATC2

PAINTED GYP. BD. ABOVE H.M. FRAMES AS INDICATED ON SECTIONS.
DETAILS TO RECEIVE SAME TOP COATS AS ADJACENT WALLS UNLESS OTHERWISE NOTED.

FINISH MATERIALS

NOTE: NOT ALL FINISHES LISTED ARE REPRESENTED IN THIS PROJECT

FLOORS

- VCT VINYL COMPOSITION TILE
- VCT2 NON SLIP V.C.T.
- VCT3 STATIC DISSIPATIVE V.C.T.
- CPT CARPET
- CPT2 CARPET 2 (ATHLETIC)
- CT CERAMIC TILE
- CONC CONCRETE WITH HARDENER
- CONC2 PIGMENTED CONCRETE
- RES RESINOUS FLOORING
- RES2 RUBBERIZED RESINOUS FLOORING
- RBR RUBBER FLOORING, TREADS, RISERS, SKIRTINGS
- TER TERRAZZO
- TER1 TERRAZZO TILE
- SPORT RUBBER SPORTS FLOOR
- SPORT2 POURED URETHANE FLOORING
- EX EXISTING TO REMAIN
- PCT PORCELAIN CERAMIC TILE

CEILINGS

- SATC SUSPENDED ACOUSTIC TILE CLG. - 2'x4'
- SATC2 SUSPENDED ACOUSTIC TILE CLG. - 2'x2'
- SATC3 2'x4' FRP PANES WITH FIBERGLASS GRID
- GYP. SUSPENDED GYP. BD. - PAINTED
- GYP2 GYP. BD. - PAINTED (HORIZ. SHAFTWALL CLG. SYSTEM - 1 HOUR RATED)
- EXP EXPOSED CONSTRUCTION - PAINTED
- EX EXISTING TO REMAIN

BASES

- VNL 4" VINYL
- CT CERAMIC TILE
- QT QUARRY TILE
- NONE NO BASE
- RES INTEGRAL RESINOUS BASE
- RES2 INTEGRAL RUBBERIZED RESINOUS BASE
- RBR RUBBER BASE
- RBR2 VENTED RUBBER BASE
- SGFT STRUCTURAL GLAZED FACING TILE
- CCMU GLAZED CMU
- EX EXISTING TO REMAIN
- PCT PORCELAIN CERAMIC TILE

WALLS

- PTD PAINTED
- CT CERAMIC TILE
- SPCTG SPECIAL WALL COATING
- AP-1 ACOUSTIC WALL PANELS, TYPE AP-1
- AP-2 ACOUSTIC WALL PANELS, TYPE AP-2
- SGFT STRUCTURAL GLAZED FACING TILE
- ACMU ACOUSTIC C.M.U.
- GCMU GLAZED C.M.U.
- OP OPERABLE WALL
- BRK BRICK VENEER

NUMBERED REMARKS

WHEN SHOWN IN THE REMARKS COLUMN OF THE FINISH SCHEDULE:

1. EXPOSED CONSTRUCTION PAINTED INDICATES:
   - STRUCTURE SHALL BE PAINTED COLOR # 1
   - ROOF DECK SHALL BE PAINTED COLOR #2
   - MECHANICAL EQUIPMENT AND DUCTS SHALL BE PAINTED COLOR # 3
2. EXPOSED CONSTRUCTION PAINTED FLAT BLACK
3. PROVIDE FULL HEIGHT CERAMIC TILE AT SHOWER AND AT FLOOR OF SHOWER
4. PROVIDE NON-SLIP VCT @ RAMP
5. CERAMIC TILE WAINSCOT TO 4'-0" A.F.F.
6. ALL WORK IN ROOM PART OF ALTERNATE 1
7. NOT USED
8. ALL WORK IN ROOM PART OF ALTERNATE 4

WINDOW, STOREFRONT + CURTAINWALL NOTES

1. CONTRACTOR SHALL VERIFY ALL MASONRY & ROUGH OPENINGS, PARTICULARLY AT SUSPENDED PLATE HEADS, PRIOR TO FABRICATION.
2. CONTRACTOR TO COORDINATE REQUIRED TOLERANCES IN ALL DIMENSIONS NEEDED TO MANUFACTURE AND INSTALL WINDOWS, INCLUDING SUBFRAMES, AS REQUIRED. VERIFY ACTUAL DIMENSIONS IN THE FIELD WITH THOSE SHOWN ON ALL DRAWINGS, INCLUDING DETAILS SHOWN ON OTHER SHEETS.
3. CONTINUOUSLY SEAL ALL SIDES OF STOREFRONT AND SUBFRAMES ABUTTING DISSIMILAR MATERIALS AT HEADS, JAMBS, AND SILLS, TYPICALLY.
4. PROVIDE APPROPRIATE ANCHORAGE SYSTEM FOR ALL CONDITIONS TO SECURE WINDOWS IN ROUGH OPENINGS. PROVIDE SUBFRAMING AS SHOWN ON DETAILS AND/OR SPECIFIED.
5. ALL WINDOWS AND STOREFRONTS SHALL RECEIVE 1" HORIZONTAL BLINDS ON THE INSIDE OF THE ROOM. U.O.N. BLINDS ARE NOT REQUIRED FOR CURTAINWALL UNITS.
6. SEE SHEET A3.3 FOR HEAD, JAMB, AND SILL DETAILS
7. PROVIDE FOR THERMAL EXPANSION AT ALL STOREFRONT SYSTEMS.
8. COORDINATE FRAMES W/ PLAN WHEN MORE THAN ONE CONSTRUCTION DETAIL IS REFERENCED
9. AS REQUIRED FOR DESIGN LOADING, WINDOW MANUFACTURER SHALL PROVIDE MULLION REINFORCING AND VERTICAL EXTENSIONS UP TO STRUCTURE ABOVE (ATTACHMENT TO STRUCTURE BY MANUFACTURER). SEE SECTIONS AND DETAILS FOR ADDITIONAL WORK RELATING TO STOREFRONT SYSTEM.
10. IDENTIFICATION OF OPENING TYPES AS "CURTAIN WALL" OR "STOREFRONT" IS BASED ON SYSTEM REQUIREMENTS OF A PARTICULAR MANUFACTURE. CONTRACTOR IS TO DETERMINE BEST APPLICATION OF PROPOSED MANUFACTURE AND SYSTEMS BASED ON PERFORMANCE REQUIREMENTS, SIZE OF OPENING, AND INSTALLATION CONDITION.
11. OVERALL DIMENSIONS OF STOREFRONT ARE APPROXIMATE. CONTRACTOR TO COORDINATE REQUIRED TOLERANCES IN ALL DIMENSIONS NEEDED TO MANUFACTURE AND INSTALL STOREFRONT, INCLUDING SUBFRAMES, AS REQUIRED. CONTRACTOR SHALL VERIFY ACTUAL DIMENSIONS IN THE FIELD WITH THOSE SHOWN ON ALL DRAWINGS, INCLUDING DETAILS SHOWN ON OTHER SHEETS, PRIOR TO FABRICATION.

WALL KEY

WALLS ON FINISH SCHEDULE ARE DENOTED THUS:



TYPICAL UNLESS OTHERWISE NOTED.

TYPICAL NOTES

1. REFER TO FLOOR PLANS, CEILING PLANS, INTERIOR ELEVATIONS, SECTIONS AND DETAILS FOR ADDITIONAL INFORMATION AND EXTENT OF EACH FINISH WHEN MORE THAN ONE FINISH IS INDICATED FOR ANY SPACE.
2. SEE CEILING PLANS FOR HEIGHTS OF CEILINGS AND LOCATIONS AND HEIGHTS OF BULKHEADS, SOFFITS, ETC.
3. PAINT ALL EXPOSED STEEL LADDERS, LINTELS, HUNG PLATES, HAND AND GUARD RAILS, STAIRS AND STRINGERS.
4. PAINT ALL EXPOSED STEEL COLUMNS, TRUSSES, JOISTS, BEAMS, DECK, AND MISCELLANEOUS BRIDGING, ANGLES, PLATES, ETC.
5. INSTALL CERAMIC TILE COVE BASE FLUSH WITH FLOOR TILE AND FLUSH WITH CERAMIC WALL TILE.
6. FIELD PAINT ALL EXPOSED, NON-FACTORY FINISHED STRUCTURAL, MECHANICAL, OR ELECTRICAL COMPONENTS.
7. PROVIDE SEALANT AT INTERSECTIONS OF DISSIMILAR MATERIALS, COMPLYING WITH SPECIFICATIONS, DRAWINGS, AND AS RECOMMENDED BY MANUFACTURER.
8. REFER TO INTERIOR ELEVATIONS AND SECTIONS FOR ADDITIONAL FINISH INFORMATION. ANY FINISH MATERIAL SHOWN IN ELEVATIONS OR SECTIONS SHALL BE PROVIDED AS NOTED OR DEPICTED ON THE DRAWINGS AND SPECIFICATIONS.
9. BRING CONFLICTS TO THE ARCHITECTS ATTENTION DURING THE BIDDING PERIOD FOR CLARIFICATION.
10. WALL AND CEILING FINISHES SHALL INCLUDE ALL PROJECTIONS, BEAM ENCLOSURES, RECESSES, BULKHEADS, MATERIAL CHANGES, OR OTHER ENCLOSURES.
11. ELECTRICAL OUTLETS, CLOCKS, P.A. SPEAKERS OR OTHER DEVICES SHOWN ON THE ARCHITECTURAL DRAWINGS SERVE TO ALERT OTHER SUBCONTRACTORS OF THE PRESENCE OF SUCH DEVICES. CONSULT THE ELECTRICAL DRAWINGS FOR FURTHER INFORMATION AND ADVISE ARCHITECT OF ANY CONFLICT OF LOCATION OR TYPE OF DEVICES SHOWN. CONTRACTOR SHALL COORDINATE ALL WORK, FINISHES AND DEVICES. COORDINATE ALL WORK, FINISHES AND DEVICES.
12. PROVIDE MOISTURE RESISTANT GYPSUM BOARD AT TOILET ROOMS, & SERVICE CLOSETS FOR WALLS DESIGNATED AS GYP. BD. WALL TYPES.
13. PROVIDE ACCOUSTICAL WALL PANELS INDICATED ON INTERIOR ELEVATIONS, WALL SECTIONS AND BUILDING SECTIONS.
14. FIELD PAINT ELECTRICAL PANELS EXCEPT PANELS LOCATED IN ELECTRICAL CLOSETS AND MECHANICAL ROOMS.
15. WHERE CONFLICT EXISTS BETWEEN FINISH SCHEDULE AND MATERIALS SHOWN ON OTHER PLANS, THE MORE EXPENSIVE FINISH MATERIAL SHALL TAKE PRECEDENCE.
16. PAINT COLUMN COVERS TO MATCH ADJACENT WALL PATTERN AND COLOR REGARDLESS OF MATERIAL.

College of Southern Maryland
Grimm and Parker Architects
1355 Beverly Rd.
Suite 105
McLean VA 22101
703.903.9100
703.903.9755 Fax

I CERTIFY THAT THESE DOCUMENTS WERE PREPARED OR APPROVED BY ME AND THAT I AM A DULY LICENSED ARCHITECT IN THE STATE OF MARYLAND, LICENSE NO. 6000 EXPIRATION DATE 6/10/04.

DOOR AND FINISH SCHEDULES, WINDOW, STOREFRONT AND CURTAINWALL SCHEDULE
COLLEGE OF SOUTHERN MARYLAND WELLNESS CENTER
LA PLATA, MARYLAND

DATE	DESCRIPTION
4/30/03	BID SET

© GRIMM AND PARKER,P.C. 2001

PROJECT RECORD DRAWINGS

A-3.1

DGS# - CC-09-MC99-311

RECEIVED
OCT 25 2004
GRIMM AND PARKER

20106a31.dwg

© GRIMM AND PARKER P.C. 2001

HOLLOW METAL FRAME SCHEDULE

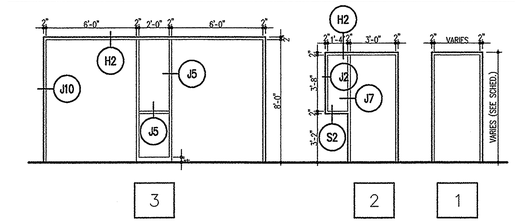

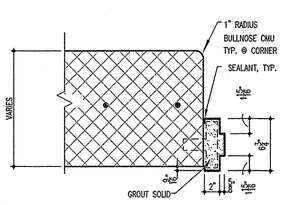

JAMB DETAIL J12
1 1/2" = 1'-0"

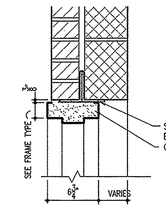

HEAD DETAIL H5
1 1/2" = 1'-0"

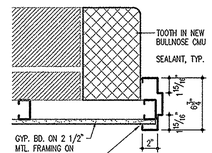

JAMB DETAIL J11
1 1/2" = 1'-0"

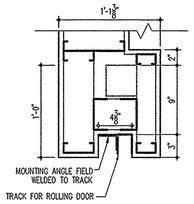

JAMB DETAIL J10
1 1/2" = 1'-0"

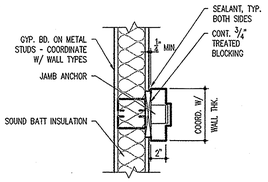

JAMB DETAIL J9
1 1/2" = 1'-0"

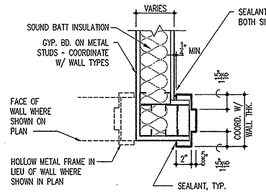

JAMB DETAIL J8
1 1/2" = 1'-0"

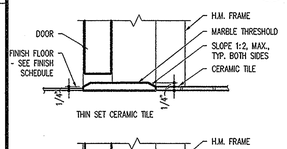

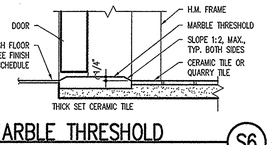

MARBLE THRESHOLD S6
3" = 1'-0"

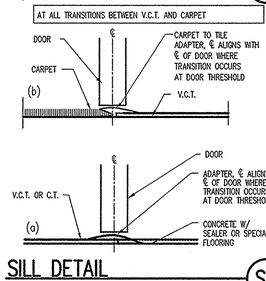

SILL DETAIL S5
1 1/2" = 1'-0"

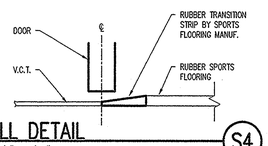

SILL DETAIL S4
1 1/2" = 1'-0"

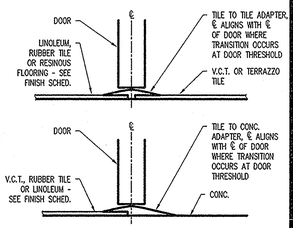

TRANSITION STRIP S3
3" = 1'-0"

0 6" 1' 2'
SCALE: 1½" = 1'-0"
FILENAME

TYPICAL BORROWED LITE DETAILS

NOTE: REFER TO THESE DETAILS FOR TYPICAL NOTES AND DIMENSIONS FOR ALL BORROWED LITE FRAMES.

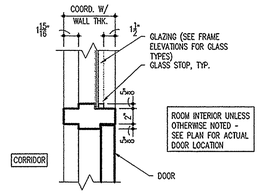

TRANSOM H4
1 1/2" = 1'-0"

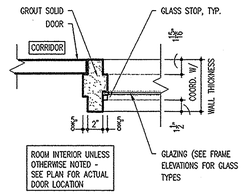

INTERMEDIATE MULLION J7
1 1/2" = 1'-0"

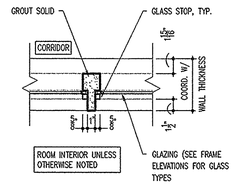

INTERMEDIATE MULLION J6
1 1/2" = 1'-0"

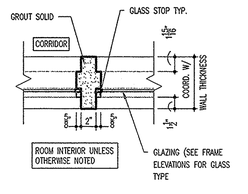

INTERMEDIATE MULLION J5
1 1/2" = 1'-0"

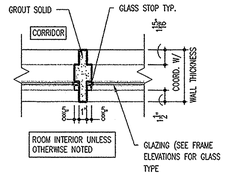

INTERMEDIATE MULLION J4
1 1/2" = 1'-0"

TYPICAL EXTERIOR WALL DETAILS

NOT USED H3
1 1/2" = 1'-0"

NOT USED J3
1 1/2" = 1'-0"

TYPICAL INTERIOR PARTITION DETAILS

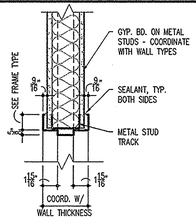

GYP. BD. HEAD H2
1 1/2" = 1'-0"

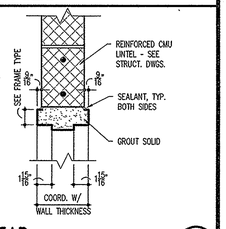

CMU HEAD H1
1 1/2" = 1'-0"

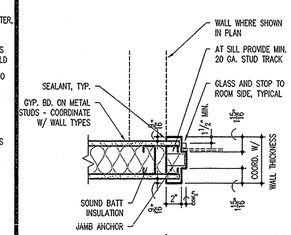

GYP. BD. JAMB/SILL S2 J2
1 1/2" = 1'-0"

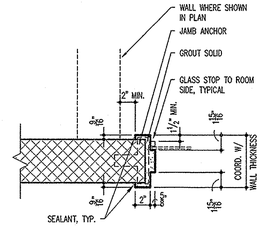

CMU JAMB/SILL S1 J1
1 1/2" = 1'-0"

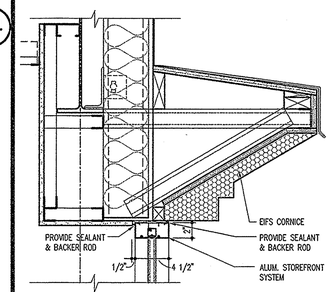

STOREFRONT HEAD DTL. I8
1 1/2" = 1'-0"

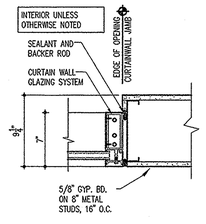

INT. CURTAINWALL JAMB I6
1 1/2" = 1'-0"

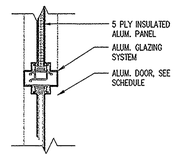

STOREFRONT MULLION DTL G8
1 1/2" = 1'-0"

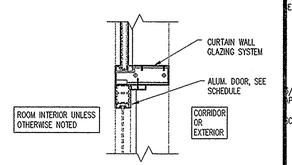

CURTAINWALL TRANSOM G6
1 1/2" = 1'-0"

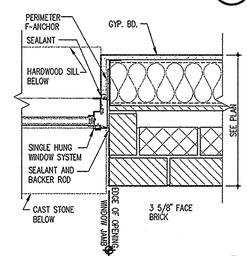

STOREFRONT JAMB DTL. E8
1 1/2" = 1'-0"

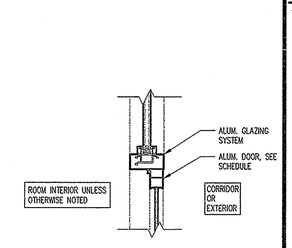

STOREFRONT TRANSOM E6
1 1/2" = 1'-0"

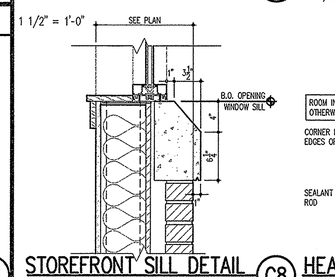

STOREFRONT SILL DETAIL C8
1 1/2" = 1'-0"

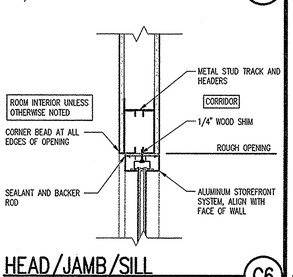

HEAD/JAMB/SILL C6
1 1/2" = 1'-0"

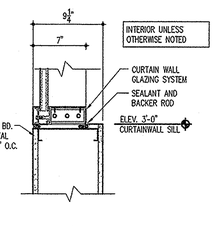

CURTAINWALL SILL DETAIL A8
1 1/2" = 1'-0"

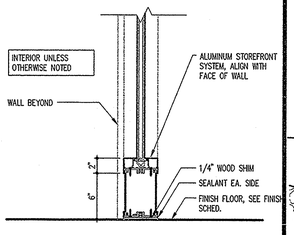

SILL A6
1 1/2" = 1'-0"

TYPICAL WINDOW, STOREFRONT, CURTAINWALL, HEAD /JAMB/ SILL DETAILS

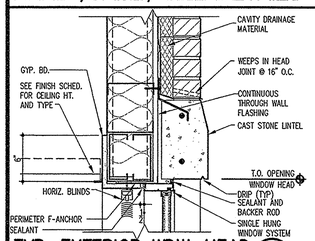

TYP. EXTERIOR WDW. HEAD K3
1 1/2" = 1'-0"

NOTE: SEE DTL E1 FOR LINTEL ANCHOR NOTES

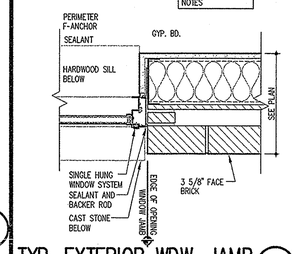

TYP. EXTERIOR WDW. JAMB I3
1 1/2" = 1'-0"

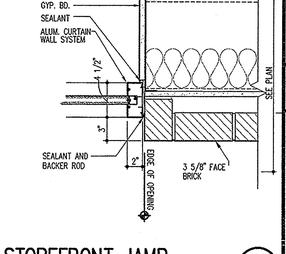

STOREFRONT JAMB I1
1 1/2" = 1'-0"

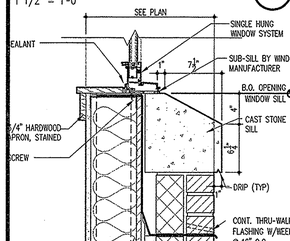

TYP. EXTERIOR WDW. SILL G3
1 1/2" = 1'-0"

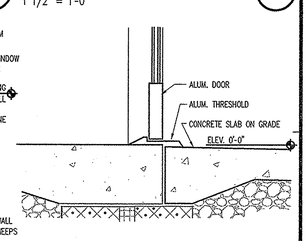

STOREFRONT SILL G1
1 1/2" = 1'-0"

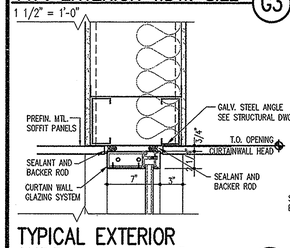

TYPICAL EXTERIOR CURTAINWALL HEAD E3
1 1/2" = 1'-0"

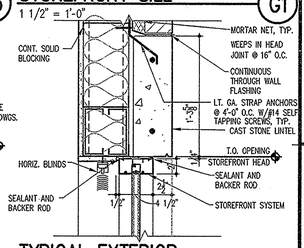

TYPICAL EXTERIOR STOREFRONT HEAD E1
1 1/2" = 1'-0"

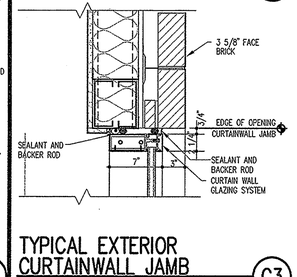

TYPICAL EXTERIOR CURTAINWALL JAMB C3
1 1/2" = 1'-0"

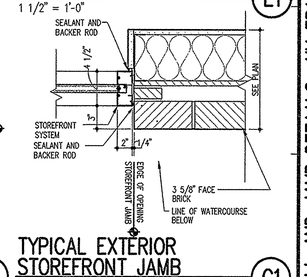

TYPICAL EXTERIOR STOREFRONT JAMB C1
1 1/2" = 1'-0"

TYPICAL EXTERIOR CURTAINWALL SILL A3
1 1/2" = 1'-0"

TYPICAL EXTERIOR STOREFRONT SILL A1
1 1/2" = 1'-0"

OCT 2 5 2004

college of southern maryland

1355 Beverly Rd.
Suite 105
McLean VA 22101
703.903.9100
703.903.9755 Fax

Grimm and Parker Architects

I CERTIFY THAT THESE DOCUMENTS WERE PREPARED OR APPROVED BY ME, AND THAT I AM A DULY LICENSED ARCHITECT IN THE STATE OF MARYLAND, LICENSE NO. 5080 EXPIRATION DATE 6/10/04.

HEAD SILL AND JAMB DETAILS, HM FRAME SCHEDULE, WINDOW, STOREFRONT & CURTAINWALL DETAILS COLLEGE OF SOUTHERN MARYLAND WELLNESS CENTER LA PLATA, MARYLAND

DATE	DESCRIPTION
4/30/03	BID SET

© GRIMM AND PARKER, P.C. 2001

PROJECT RECORD DRAWINGS

A-3.3

DGS# - CC-09-MC99-311

© GRIMM AND PARKER,P.C. 2001

INTERIOR WALL TYPES

SCALE: 3/4" = 1'-0"

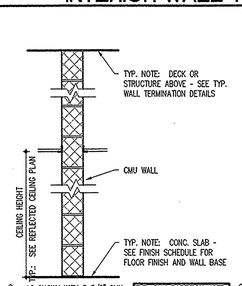

K1 AS SHOWN WITH 3 5/8" CMU
K2 AS SHOWN WITH 5 5/8" CMU
K3 AS SHOWN WITH 7 5/8" CMU
K4 AS SHOWN WITH 9 5/8" CMU
K5 AS SHOWN WITH 11 5/8" CMU

TYP. CMU PARTITION NOTE: SEE CODE STUDY FOR LOCATIONS OF RATED WALLS. WHERE THESE WALLS ARE INDICATED, COMPLY W/THE FOLLOWING:
1 HR. - UL #U906
2 HR. - UL #U905
3 HR. - UL #U904

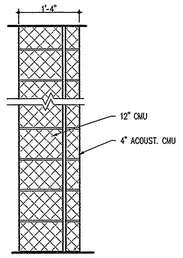

B1 ACOUSTIC CMU VENEER
B2 AS SHOWN WITH S.G.F.T. IN LIEU OF ACOUSTIC CMU

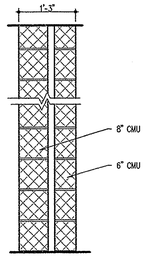

G1 DOUBLE WYTHE CMU WALL

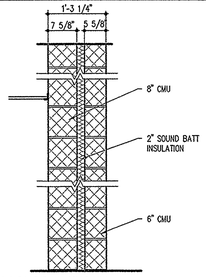

D1 DOUBLE WYTHE CMU SOUND WALL

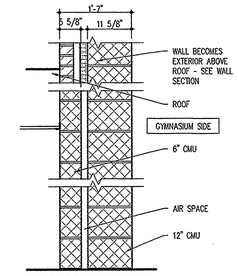

E1 DOUBLE WYTHE CMU WALL

GENERAL NOTE - APPLICABLE TO ALL DRAWINGS:

ITEMS AND CONDITIONS DETAILED, NOTED OR OTHERWISE IDENTIFIED ON ONE OF THE SECTIONS OR DETAILS ARE APPLICABLE AND BINDING TO ALL OTHER SECTIONS AND DETAILS FOR IDENTICAL OR SIMILAR CONDITIONS.

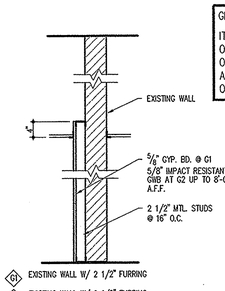

G1 EXISTING WALL W/ 2 1/2" FURRING
G2 EXISTING WALL W/ 2 1/2" FURRING

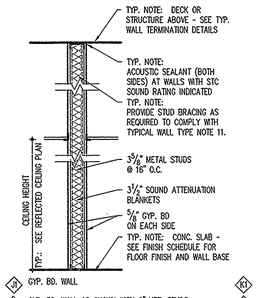

H1 GYP. BD. WALL
H2 GYP. BD. WALL AS SHOWN WITH 8" MET. STUDS
H3 GYP. BD. WALL AS SHOWN W/ 1 HR. FIRE RATING, COMPLY WITH UL #U465 AND 6" STUDS
H4 WALL AS SHOWN BUT 6" STUD & IMPACT RESISTANT GWB UP TO 8'-0" A.F.F. ON FITNESS ROOM SIDE
H5 GYP. BD. WALL AS SHOWN WITH 6" MET. STUDS

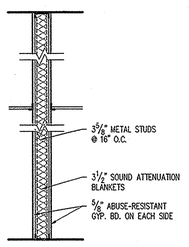

K1 ABUSE RESISTANT GYP. BD. WALL
K2 ABUSE RESISTANT GYP. BD. WALL AS SHOWN WITH 6" METAL STUDS

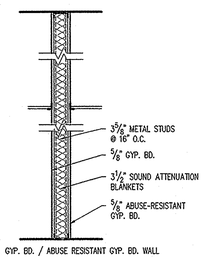

L1 GYP. BD. / ABUSE RESISTANT GYP. BD. WALL
L2 GYP. BD. / ABUSE RESISTANT GYP. BD. WALL AS SHOWN WITH 6" METAL STUDS

NOTE: WHERE TYPE L WALLS ARE INDICATED, ABUSE-RESISTANT GYP. BOARD SHALL BE USED ON SIDE OF SPACES WHERE WALL TYPE SYMBOL IS SHOWN IN PLAN

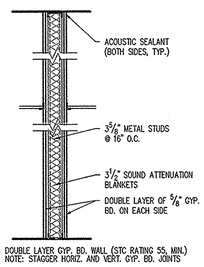

M1 DOUBLE LAYER GYP. BD. WALL (STC RATING 55, MIN.)
NOTE: STAGGER HORIZ. AND VERT. GYP. BD. JOINTS

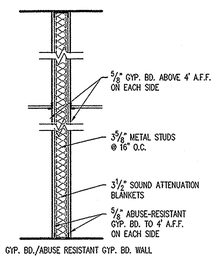

N1 GYP. BD./ABUSE RESISTANT GYP. BD. WALL
N2 GYP. BD./ABUSE RESISTANT GYP. BD. WALL AS SHOWN WITH 6" METAL STUDS

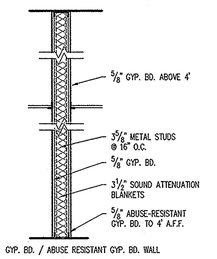

P1 GYP. BD. / ABUSE RESISTANT GYP. BD. WALL
P2 GYP. BD. / ABUSE RESISTANT GYP. BD. WALL AS SHOWN WITH 6" METAL STUDS

NOTE: WHERE TYPE M WALLS ARE INDICATED, ABUSE RESISTANT GYP. BOARD SHALL BE USED ON SIDE OF SPACES WHERE WALL TYPE SYMBOL IS SHOWN IN PLAN

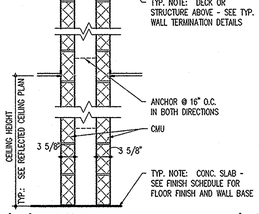

S1 4" CMU CHASE WALL
S2 CMU CHASE WALL W/ ONE WYTHE 4" CMU AND ONE WYTHE 6" CMU

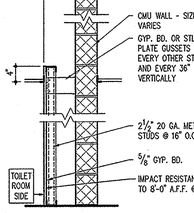

T1 GYP. BD. AND CMU CHASE WALL
T2 IMPACT RESISTANT GWB AND CMU CHASE WALL

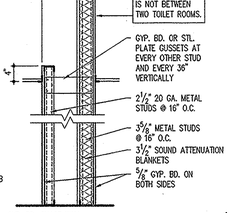

U1 GYP. BD. CHASE WALL
U2 ABUSE RESISTANT GYP. BD. CHASE WALL AS SHOWN WITH ABUSE RESISTANT GYP. BD. BOTH SIDES

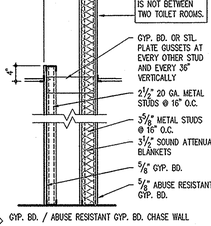

V1 GYP. BD. / ABUSE RESISTANT GYP. BD. CHASE WALL

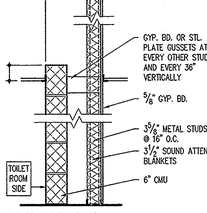

W1 GYP. BD. AND CMU CHASE WALL

WALL TERMINATION DETAILS

SCALE: 1-1/2" = 1'-0"

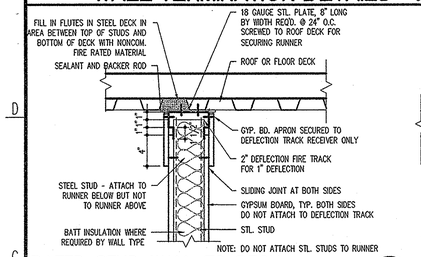

RATED STUD WALL TO DECK C16
1 1/2"=1'-0"

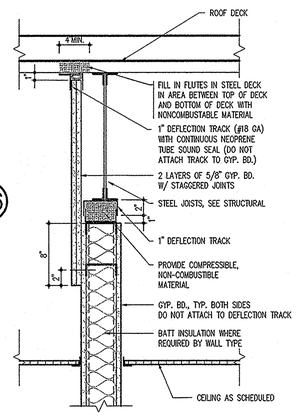

NON-RATED STUD WALL WHICH ALIGNS UNDER A JOIST A14
1 1/2"=1'-0"

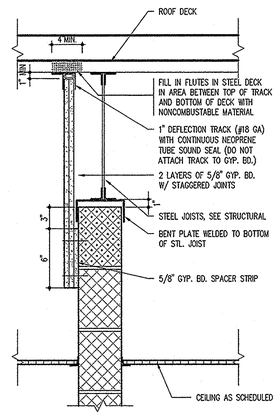

NON-RATED CMU WALL WHICH ALIGNS UNDER A JOIST A11
1 1/2"=1'-0"

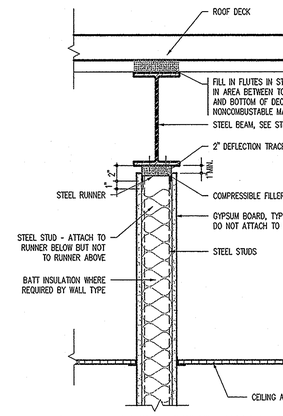

NON-RATED STUD WALL WHICH ALIGNS UNDER A BEAM A9
1 1/2"=1'-0"

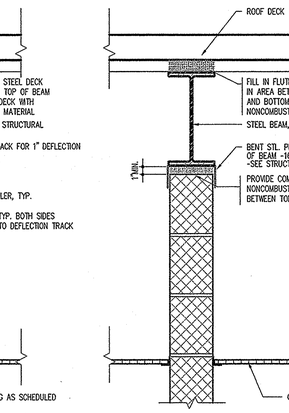

NON-RATED CMU WALL WHICH ALIGNS UNDER A BEAM A6
1 1/2"=1'-0"

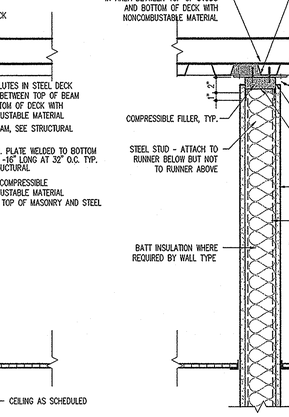

NON-RATED STUD WALL TO DECK A4
1 1/2"=1'-0"

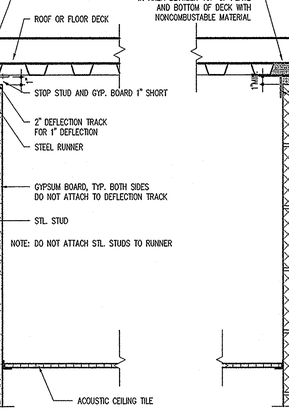

NON-RATED CMU WALL TO DECK A1
1 1/2"=1'-0"

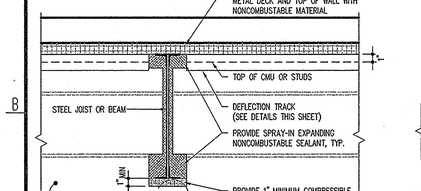

JST OR BM PERPENDICULAR TO WALL A16
1 1/2"=1'-0"

TYPICAL WALL TYPE NOTES

1. **NOT ALL WALL TYPES SHOWN ARE REPRESENTED IN THIS PROJECT.**
2. **WALLS SHALL EXTEND FULL HEIGHT TO THE FLOOR OR ROOF DECK ABOVE UNLESS SPECIFICALLY NOTED OTHERWISE.**
3. FIRE RATED WALLS SHALL EXTEND FULL HEIGHT TO THE FLOOR OR ROOF DECK AND BE SEALED WITH AN APPROVED, NON COMBUSTIBLE FIRE STOP MATERIAL.
4. SEE CODE STUDY FOR RATED WALL LOCATIONS.
5. SEE WALL SECTIONS AND DETAILS FOR EXTERIOR WALL TYPES.
6. THESE WALL TYPES ARE GENERAL IN NATURE AND DO NOT COVER EVERY VARIATION THAT MAY OCCUR THROUGHOUT THE PROJECT. SEE WALL SECTIONS AND DETAILS FOR ADDITIONAL INFORMATION.
7. TYPICAL CMU INTERIOR PARTITION SHALL BE TYPE A2 UNLESS INDICATED OTHERWISE BY WALL TYPE SYMBOLS, WALL SECTIONS OR OTHER DETAILS.
8. TYPICAL GYPSUM BOARD/STUD WALL PARTITION SHALL BE TYPICAL UNLESS INDICATED OTHERWISE BY WALL TYPE SYMBOLS, WALL SECTIONS OR OTHER DETAILS.
9. WALL TYPES MAY NOT HAVE BEEN INCLUDED IN THIS SCHEDULE FOR INTERIOR WALL TYPES WHICH ARE COVERED BY WALL SECTIONS.
10. THESE WALL TYPES DO NOT SHOW LATERAL BRACING OR WALL REINFORCING. SEE STRUCTURAL AND OTHER DRAWINGS FOR THAT INFORMATION.
11. SEE FINISH SCHEDULE FOR FINISHES TO BE APPLIED TO THESE WALL TYPES.
12. ALL WALLS WITH FIRE RATING INDICATED SHALL BE BUILT IN STRICT CONFORMANCE WITH A UL TESTED ASSEMBLY OR OTHER TESTED ASSEMBLY WHICH PROVIDES THE FIRE RATING INDICATED.
13. THE METAL STUDS SHALL BE A MINIMUM OF 20 GA. ON STUD WALLS WHICH ARE INDICATED TO HAVE CERAMIC TILE.
14. FURRING CHANNELS AND STUDS SHALL BE 16" O.C. MAXIMUM UNLESS SPECIFICALLY NOTED OTHERWISE.
15. THE GAGE OF ALL METAL STUDS SHALL BE SIZED SO THAT THE DEFLECTION OF THE WALL SHALL NOT EXCEED 1/240 PER ASTM C645 UNLESS A HEAVIER GAGE IS INDICATED ON THE WALL TYPE OR DETAILS.
16. IN ALL WALLS WITH SOUND ATTENUATION BLANKETS OR AN STC RATING LISTED; OUTLETS, SWITCHES, ETC., SHALL NOT BE LOCATED BACK TO BACK. OUTLETS SHALL BE OFFSET AND SEALED. PERIMETERS OF WALLS (AT ADJACENT WALLS, COLUMNS, CEILINGS, ETC.) SHOULD BE CAULKED. ADDITIONALLY, WALL PENETRATIONS SHALL BE SEALED WITH APPROPRIATE TYPE OF ACOUSTIC SEALANT.
17. IN STORAGE ROOMS (OVER 50 SQ. FT.) EXTEND WALLS FULL HEIGHT TO THE FLOOR OR ROOF DECK ABOVE AND SEAL WITH A NON COMBUSTIBLE MATERIAL TO RESIST THE PASSAGE OF SMOKE IN A MANNER APPROVED BY THE LOCAL FIRE MARSHALL.
18. CORRIDOR WALLS AND WALLS INDICATED IN THE CODE STUDY SHEET AS BEING SMOKE PARTITIONS SHALL BE BUILT TO RESIST THE PASSAGE OF SMOKE. THE WALLS SHALL IN ALL CASES EXTEND FULL HEIGHT TO THE DECK OR STRUCTURE ABOVE AND FILL FLUTES IN THE DECK AND ANY SPACES ABOVE BEAMS OR JOIST SEATS AND SEAL WITH AN APPROVED NON COMBUSTIBLE SMOKESTOP MATERIAL (EVEN IF INDICATED OTHERWISE BY THESE DRAWINGS). FILL OPENINGS AROUND PIPES AND DUCTS.
19. PROVIDE SPACE FOR DEFLECTION OF BEAMS, JOISTS, AND STEEL DECK @ TOP OF ALL WALLS THAT RUN TO THE DECK. FILL GAP WITH NON-COMBUSTABLE, COMPRESSIBLE FILLER ON NON RATED WALLS AND APPROVED FIRE SAFING ON RATED WALLS -SEE TYP. DETAILS THIS SHEET.
20. FOR CASES WHEN WALLS ARE INDICATED TO EXTEND FULL HEIGHT TO THE DECK BUT STOP AT A STRUCTURAL MEMBER, SEE THE TYPICAL DETAILS ON THIS SHEET FOR THE APPROPRIATE CLOSURE CONDITIONS. IF EXACT CONDITION IS NOT INDICATED, MODIFY CLOSEST CONDITION FOR SPECIFIC APPLICATION.
21. PROVIDE STEEL PLATE BLOCKING IN ALL STUD WALLS WHERE REQUIRED TO ATTACH LOCKERS, CASEWORK, SHELVING, LIGHTS, ELECTRICAL DEVICES, TOILET ACCESSORIES AND ANY OTHER ITEM WHICH REQUIRE SECURE ATTACHMENT TO THE WALLS.

SPECIAL WALL TYPE NOTES

ELECTRICAL BOXES IN FIREWALLS

ELECTRICAL BOXES IN FIRE RATED PARTITIONS SHALL NOT EXCEED 16 SQUARE INCHES IN AREA (IF 4"X4"), SHALL BE MADE OF STEEL, AND SHALL BE SPACED SUCH THAT THE CUMULATIVE AREA OF BOX CUT-OUTS IN THE FIREWALL DOES NOT EXCEED 100 SQUARE INCHES PER 100 SQUARE FEET OF WALL AREA. ELECTRICAL BOXES ON OPPOSITE SIDES OF THE SAME FIREWALL SHALL BE SEPARATED BY A HORIZONTAL AND VERTICAL DISTANCE OF NOT LESS THAN 24". THE ELECTRICAL CONTRACTOR SHALL MAKE MINOR ADJUSTMENTS, AS NECESSARY, TO ELECTRICAL BOX LOCATIONS TO ENSURE COMPLIANCE WITH THIS REQUIREMENT SINCE BOX LOCATIONS ARE TYPICALLY NOT DIMENSIONED ON THE DRAWINGS. CONSULT ARCHITECT IF CLARIFICATION IS REQUIRED.

TYPICAL WALL TERMINATION NOTES

1. USE THESE TYPICAL WALL TERMINATION DETAILS FOR ALL WALLS INDICATED TO EXTEND TO DECK ABOVE (UNLESS SPECIFICALLY DETAILED OTHERWISE).
2. SEE WALL TYPES ABOVE FOR ACTUAL WALL CONSTRUCTION.
3. REPLACE NONCOMBUSTABLE FILLERS WITH FIRESAFING AT WALLS WITH A FIRE RATING.
4. SHOULD A WALL REQUIRING A FIRE RATING BE LOCATED DIRECTLY UNDER A BEAM (AS SHOWN IN DETAILS 3 AND 4) THE FIRE RATING OF THE WALL SHALL BE MAINTAINED TO THE DECK BY EXTENDING WALL AROUND BEAM SIMILAR TO DETAILS 5 AND 6. CONSULT ARCHITECT FOR EXACT REQUIREMENTS TO MAINTAIN RATING.

college of southern maryland

Grimm and Parker Architects

1355 Beverly Rd.
Suite 105
McLean VA 22101
703.903.9100
703.903.9755 Fax

I CERTIFY THAT THESE DOCUMENTS WERE PREPARED OR APPROVED BY ME AND THAT I AM A DULY LICENSED ARCHITECT IN THE STATE OF MARYLAND, LICENSE NO. 9080 EXPIRATION DATE 6/10/04.

WALL TYPES AND WALL TERMINATION DETAILS
COLLEGE OF SOUTHERN MARYLAND WELLNESS CENTER
LA PLATA, MARYLAND

DATE	DESCRIPTION
4/30/03	BID SET

© GRIMM AND PARKER,P.C. 2001

PROJECT RECORD DRAWINGS

A-3.5

DGS# - CC-09-MC99-311

RECEIVED OCT 25 2004

© GRIMM AND PARKER,P.C. 2001

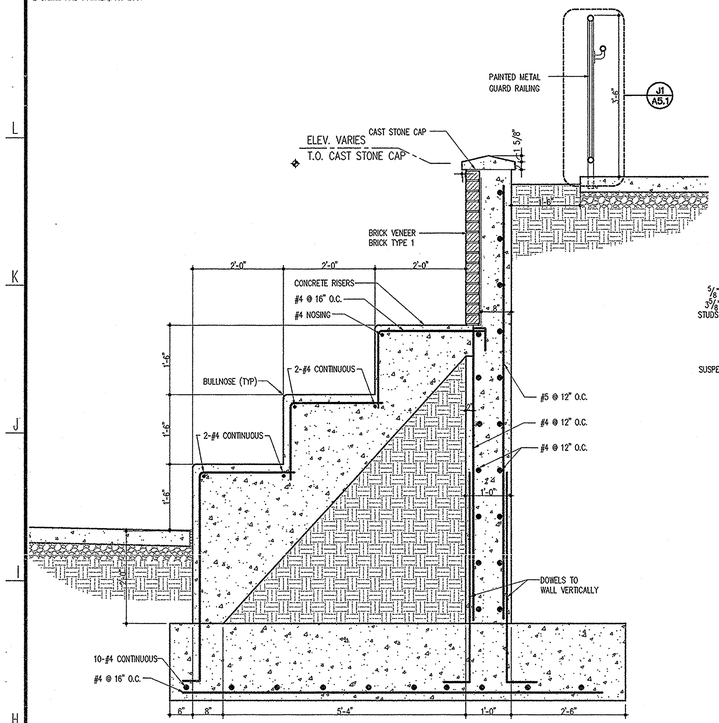

WALL SECTION
3/4"=1'-0" H14

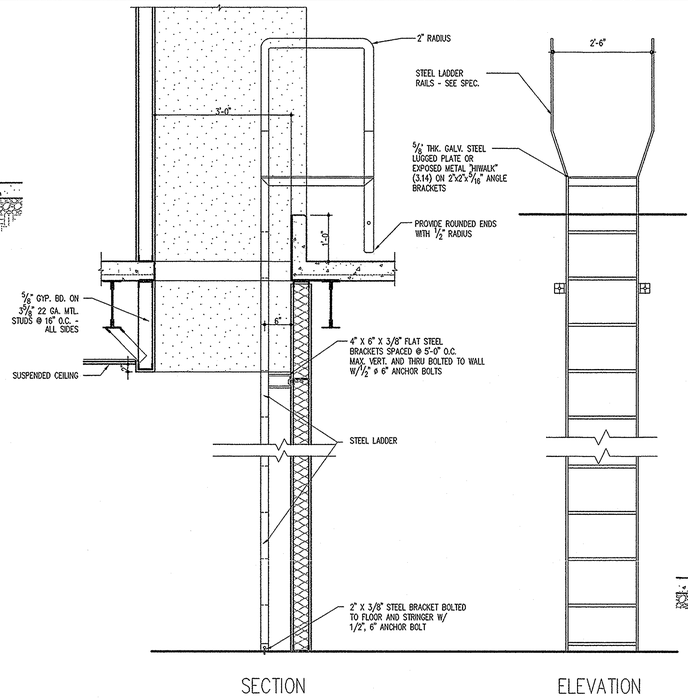

ACCESS LADDER DETAIL
3/4"=1'-0" H9

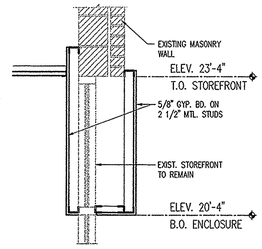

SECTION DETAIL
1/8"=1'-0" K1

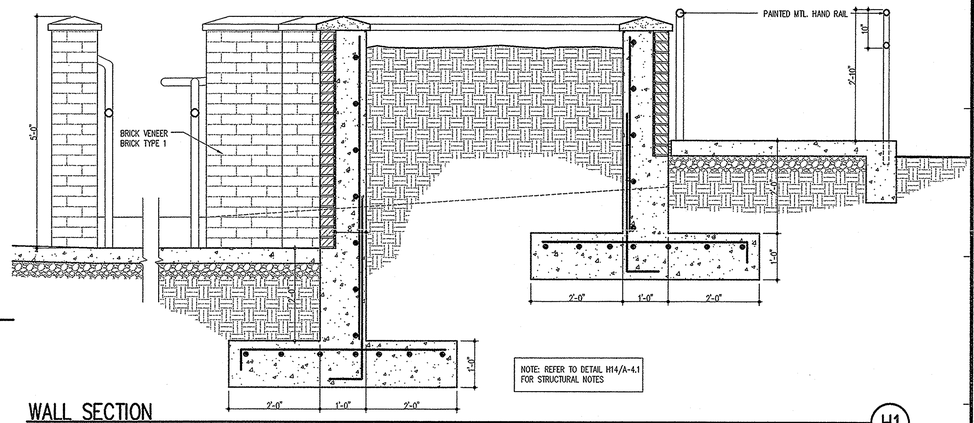

WALL SECTION
3/4"=1'-0" H1

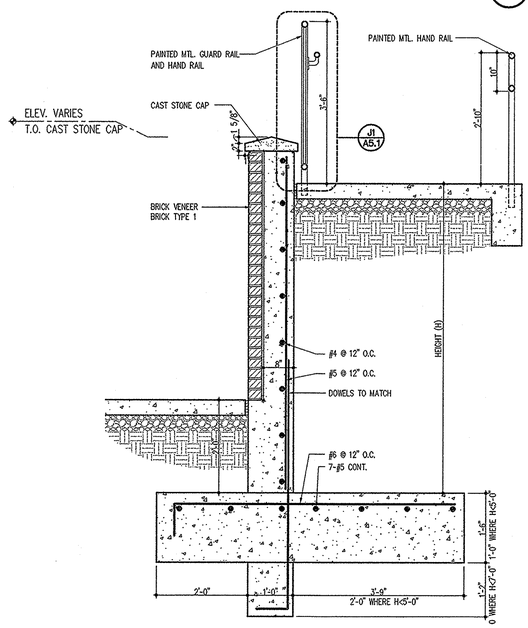

WALL SECTION
3/4"=1'-0" C1

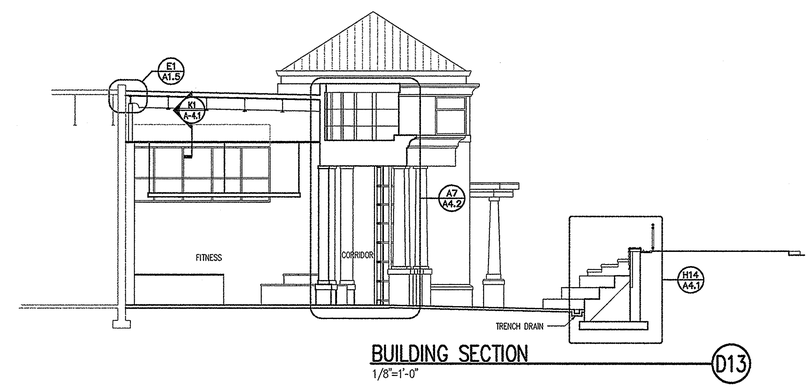

BUILDING SECTION
1/8"=1'-0" D13

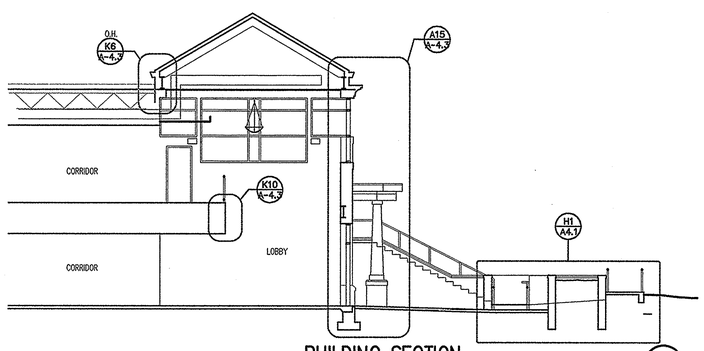

BUILDING SECTION
1/8"=1'-0" D6

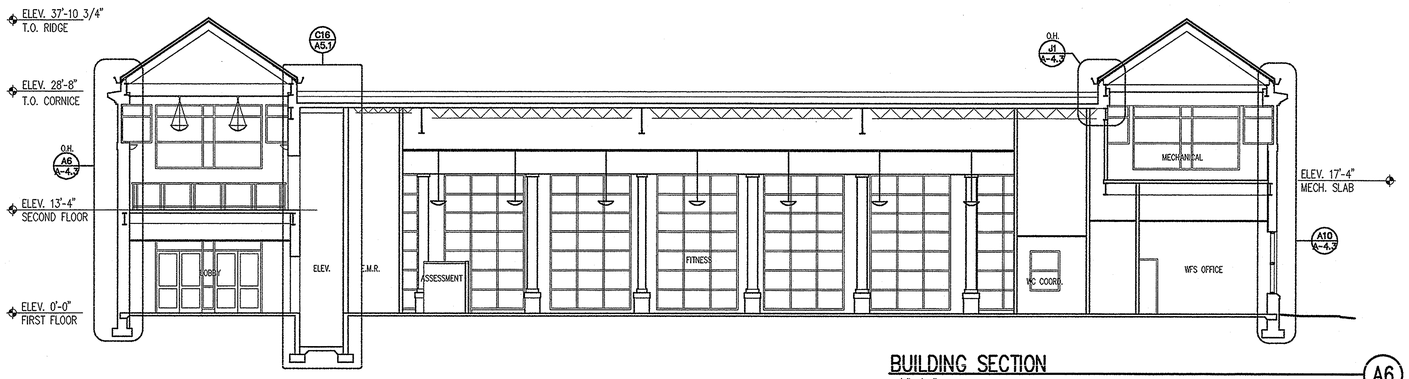

BUILDING SECTION
1/8"=1'-0" A6

KEY PLAN

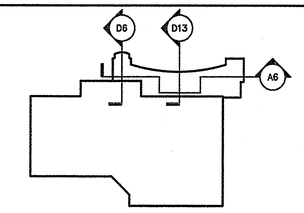

PROJECT RECORD DRAWINGS

RECEIVED
OCT 25 2004

N

college of southern maryland
1355 Beverly Rd.
Suite 105
McLean VA 22101
703.903.9100
703.903.9755 Fax

I CERTIFY THAT THESE DOCUMENTS WERE PREPARED OR APPROVED BY ME AND THAT I AM A DULY LICENSED ARCHITECT IN THE STATE OF MARYLAND, LICENSE NO. 9080 EXPIRATION DATE 6/10/04.

Grimm and Parker Architects

SHEET DESCRIPTION
COLLEGE OF SOUTHERN MARYLAND WELLNESS CENTER
LA PLATA, MARYLAND

DATE	DESCRIPTION
4/30/03	BID SET

© GRIMM AND PARKER,P.C. 2001

A-4.1

DGS# - CC-09-MC99-311

FILENAME

© GRIMM AND PARKER,P.C. 2001

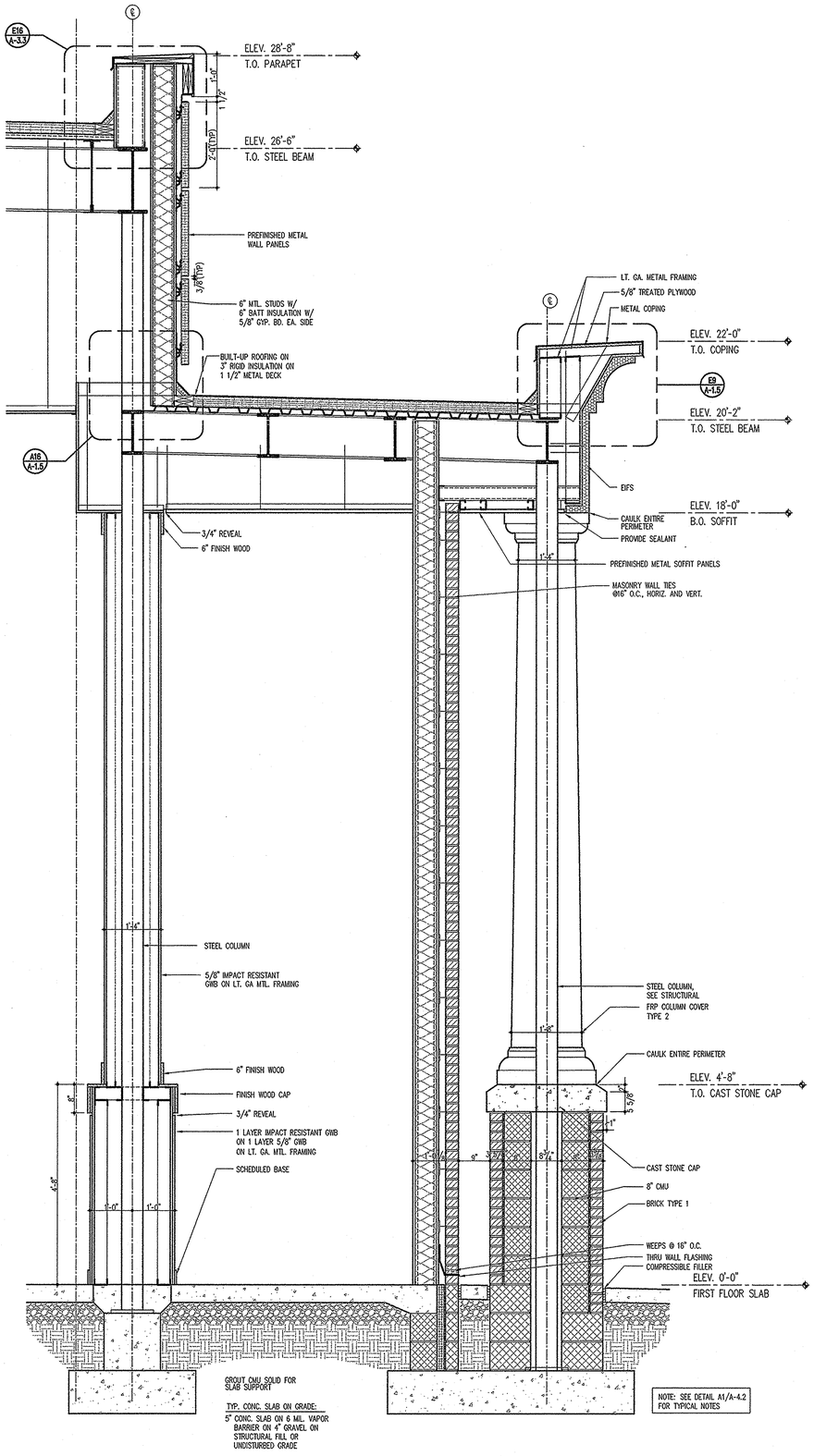

TYPICAL WALL SECTION @ CURVED WALL (A14)
3/4"=1'-0"

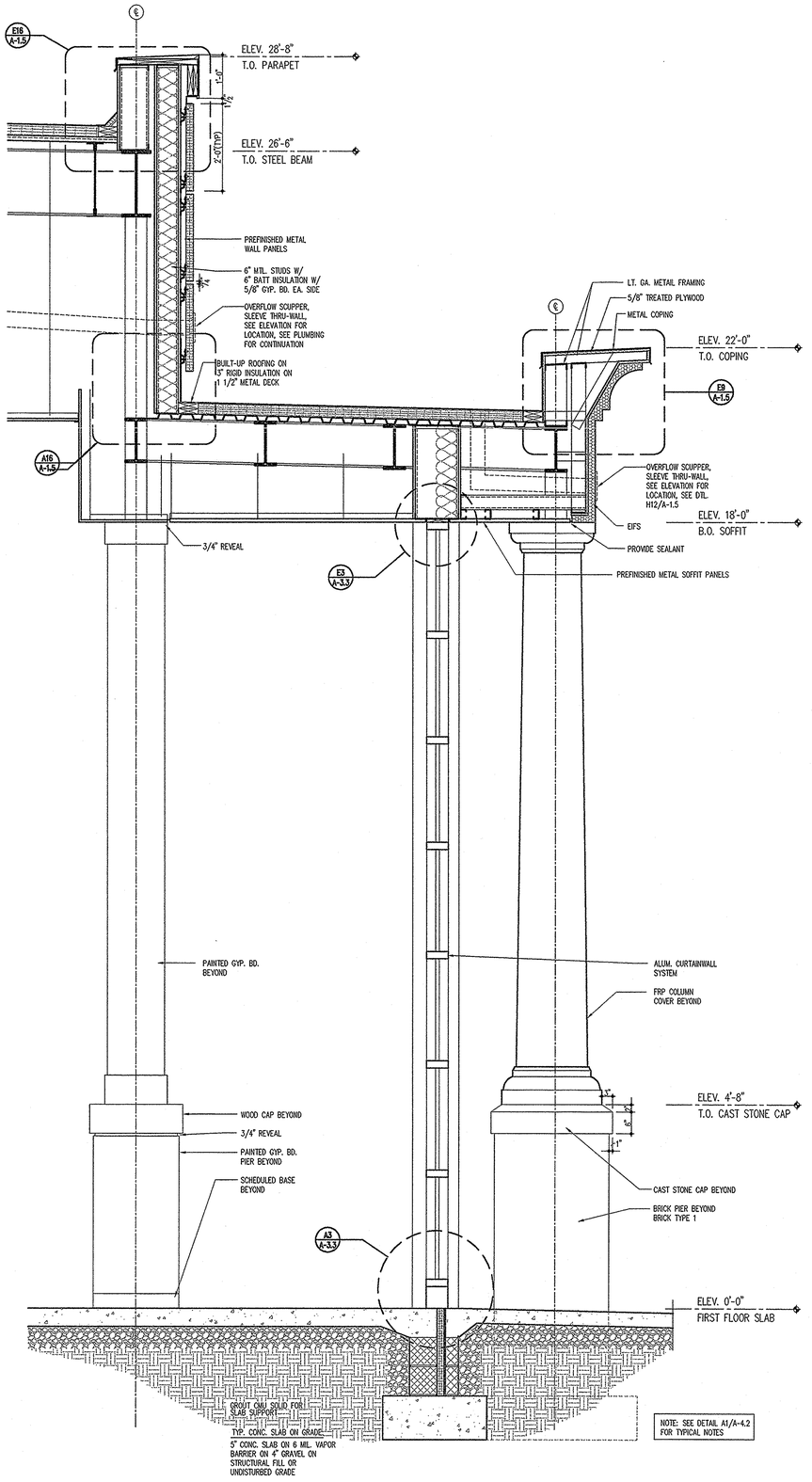

TYPICAL WALL SECTION @ CURVED WALL (A7)
3/4"=1'-0"

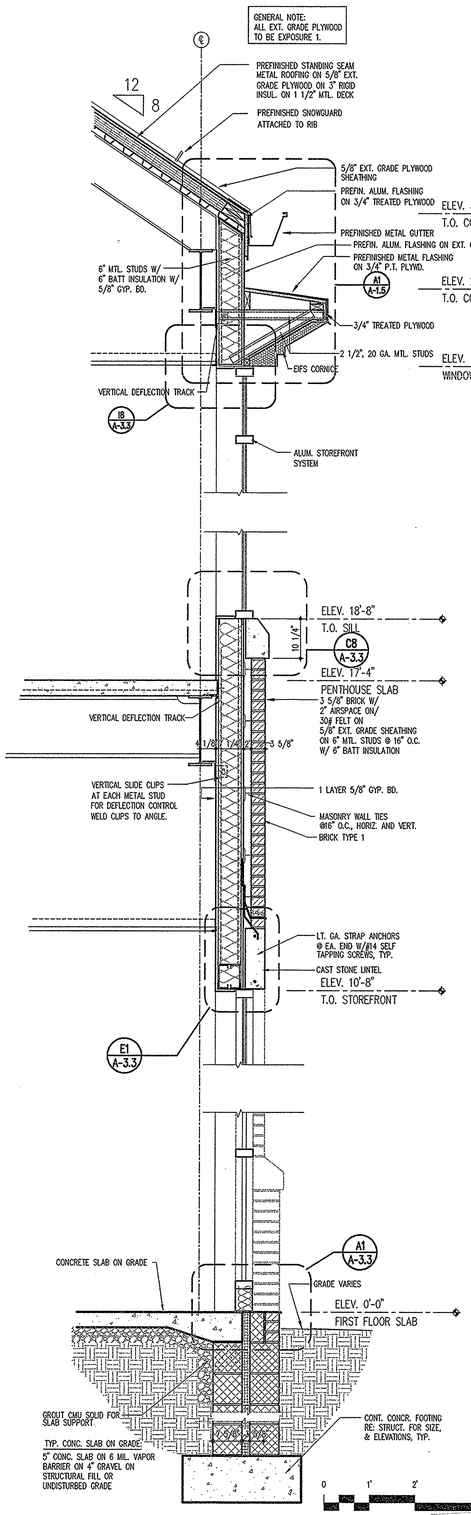

TYPICAL WALL SECTION
3/4"=1'-0"

college of southern maryland
1355 Beverly Rd.
Suite 105
McLean VA 22101
703.903.9100
703.903.9755 Fax

I KERRY THAT THESE DOCUMENTS WERE PREPARED OR APPROVED BY ME AND THAT I AM A DULY LICENSED ARCHITECT IN THE STATE OF MARYLAND, LICENSE NO. 9080 EXPIRATION DATE 6/10/04.

Grimm and Parker Architects

WALL SECTIONS
COLLEGE OF SOUTHERN MARYLAND WELLNESS CENTER
LA PLATA, MARYLAND

DATE	DESCRIPTION
4/30/03	BID SET

© GRIMM AND PARKER,P.C. 2001

PROJECT RECORD DRAWINGS

A-4.2

DGS# - CC-09-MC99-311

RECEIVED
OCT 25 2004
CITY OF LA PLATA

A1

2010dc42.dwg

© GRIMM AND PARKER,P.C. 2001

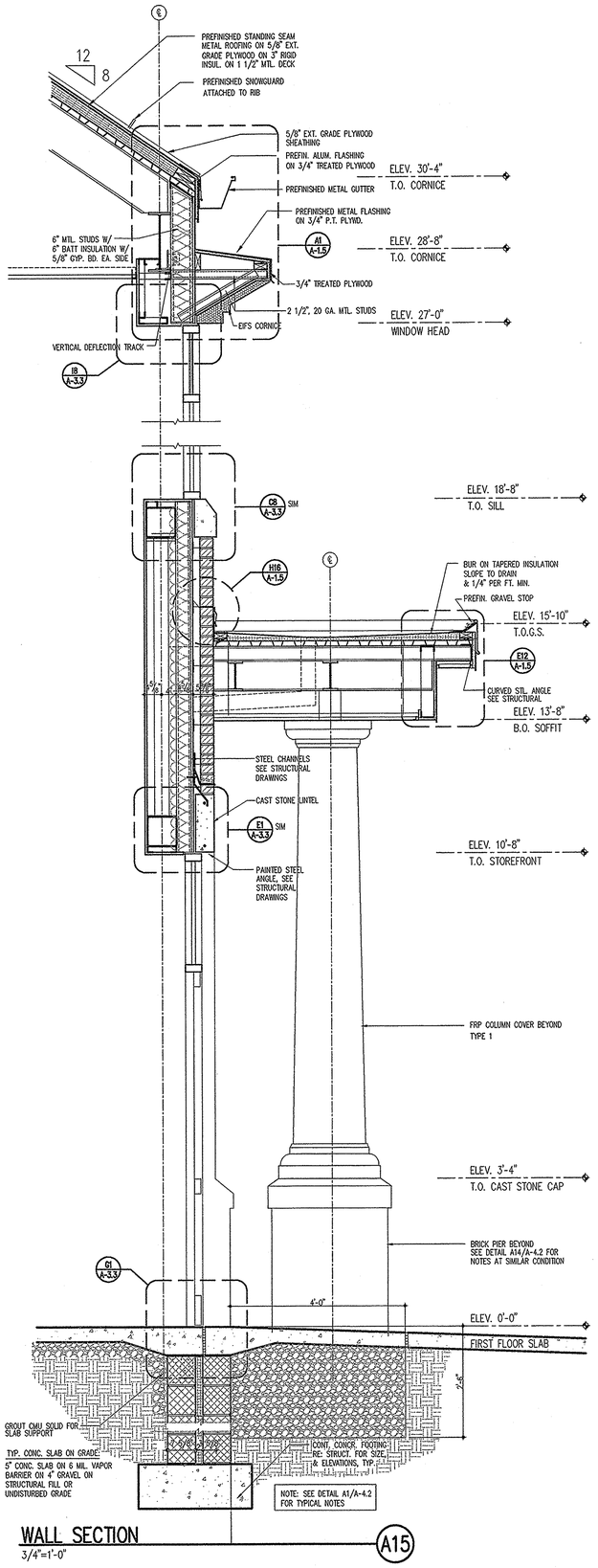

WALL SECTION
3/4"=1'-0" — A15

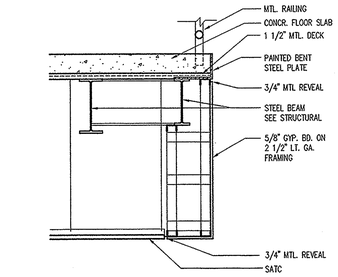

SECTION AT EDGE OF SLAB
3/4"=1'-0" — K10

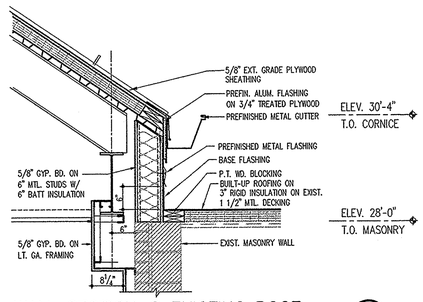

WALL SECTION @ EXISTING ROOF
3/4"=1'-0" — K6

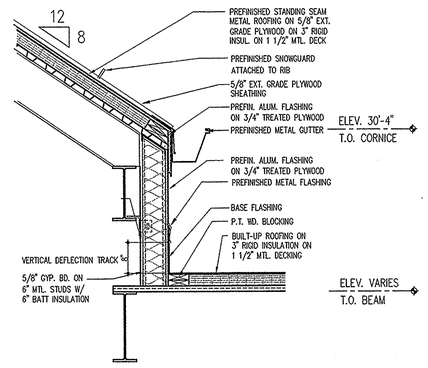

WALL SECTION
3/4"=1'-0" — J1

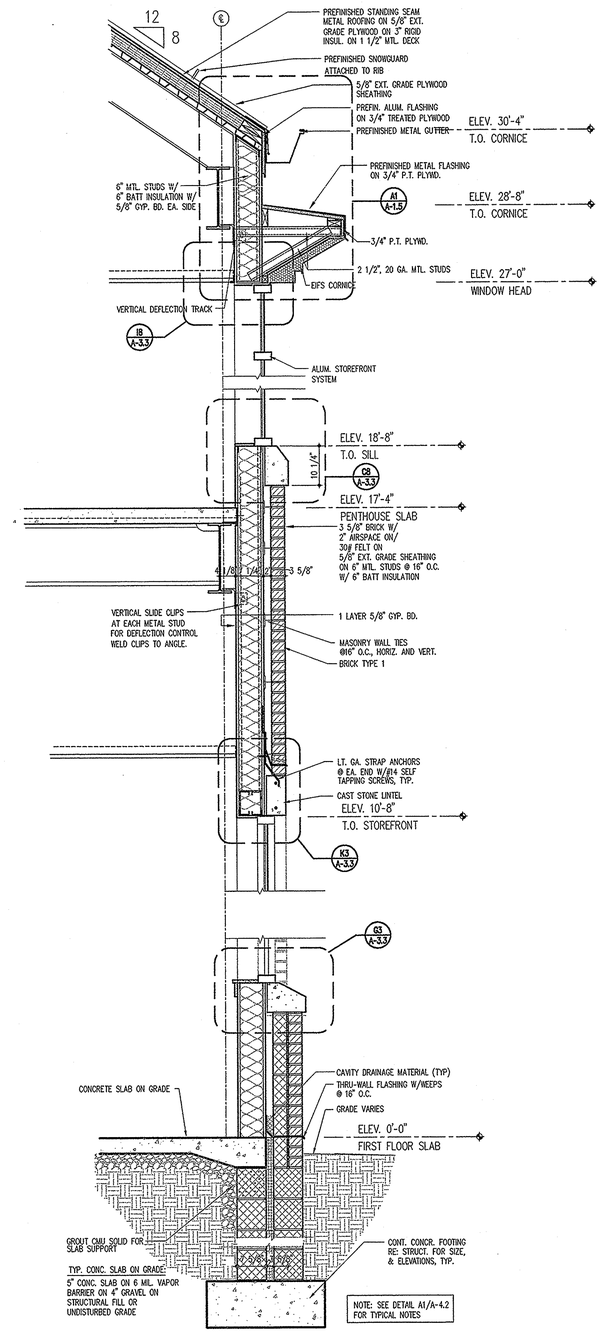

WALL SECTION
3/4"=1'-0" — A10

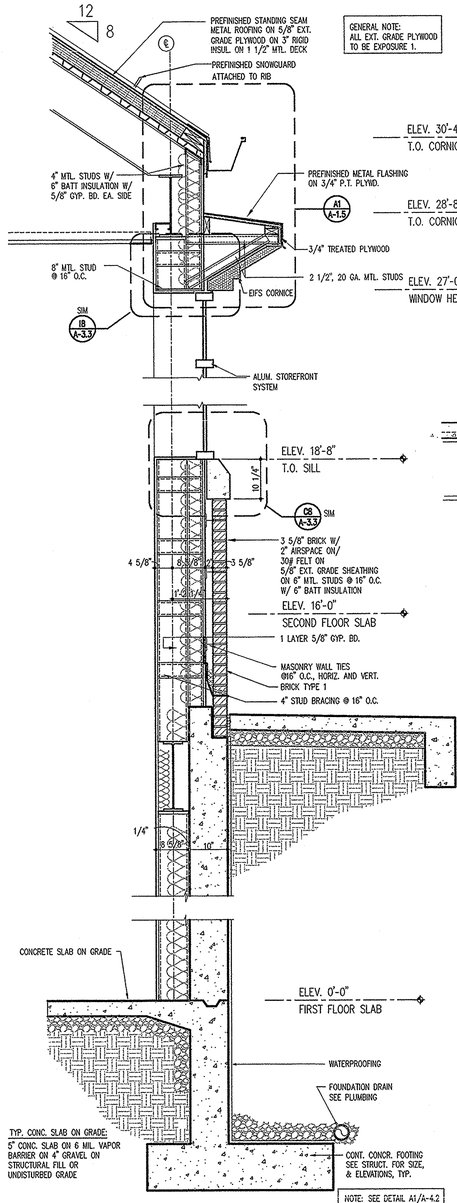

WALL SECTION
3/4"=1'-0" — A6

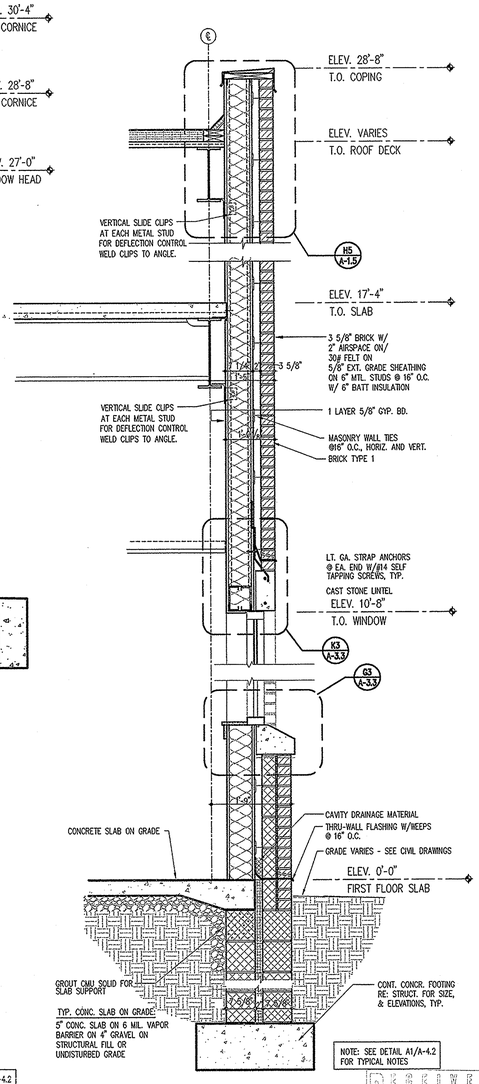

WALL SECTION
3/4"=1'-0" — A1

College of Southern Maryland
1355 Beverly Rd.
Suite 105
McLean VA 22101
703.903.9100
703.903.9755 Fax
Grimm and Parker Architects

I CERTIFY THAT THESE DOCUMENTS WERE PREPARED OR APPROVED BY ME AND THAT I AM A DULY LICENSED ARCHITECT IN THE STATE OF MARYLAND, LICENSE NO. 6080 EXPIRATION DATE 6/10/04.

WALL SECTIONS
COLLEGE OF SOUTHERN MARYLAND WELLNESS CENTER
LA PLATA, MARYLAND

DATE	DESCRIPTION
4/30/03	BID SET

© GRIMM AND PARKER,P.C. 2001

PROJECT RECORD DRAWINGS

A-4.3

DGS# - CC-09-MC99-311

RECEIVED OCT 2 2003

20106a43.dwg

© GRIMM AND PARKER,P.C. 2001

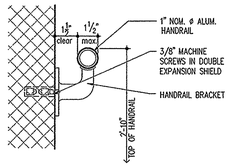

HANDRAIL DETAIL — K15
3"=1'-0"

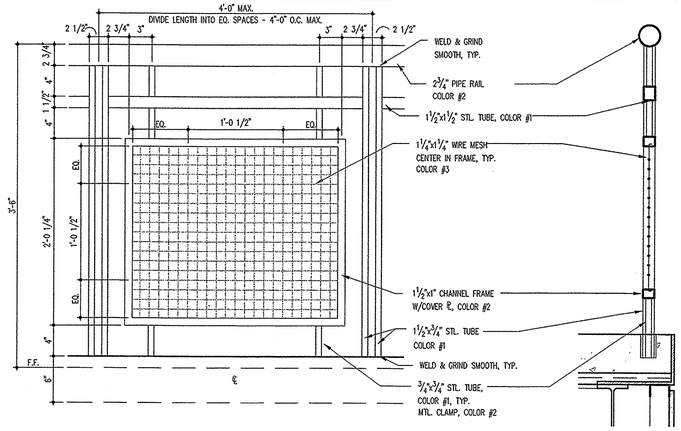

NOTE: ALL EXPOSED WELDED CONNECTIONS TO BE GROUND SMOOTH.

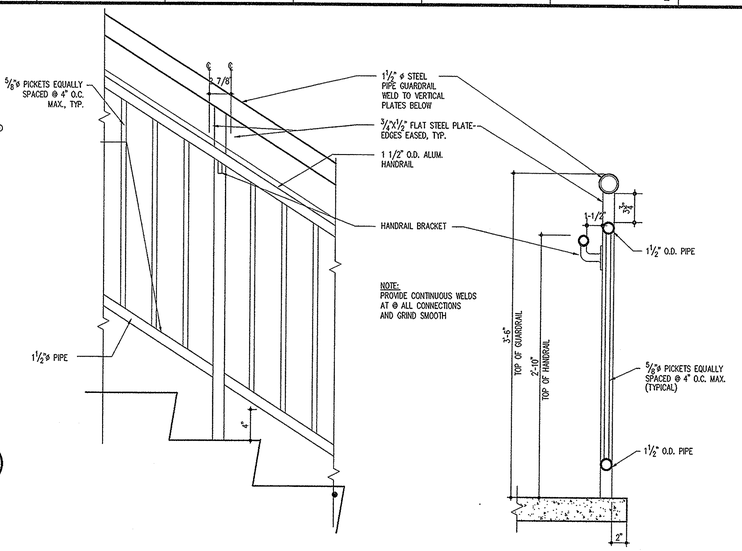

RAILING SECTION/ELEVATION — J7
1 1/2"=1'-0"

RAILING SECTION/ELEVATION — J1
1 1/2"=1'-0"

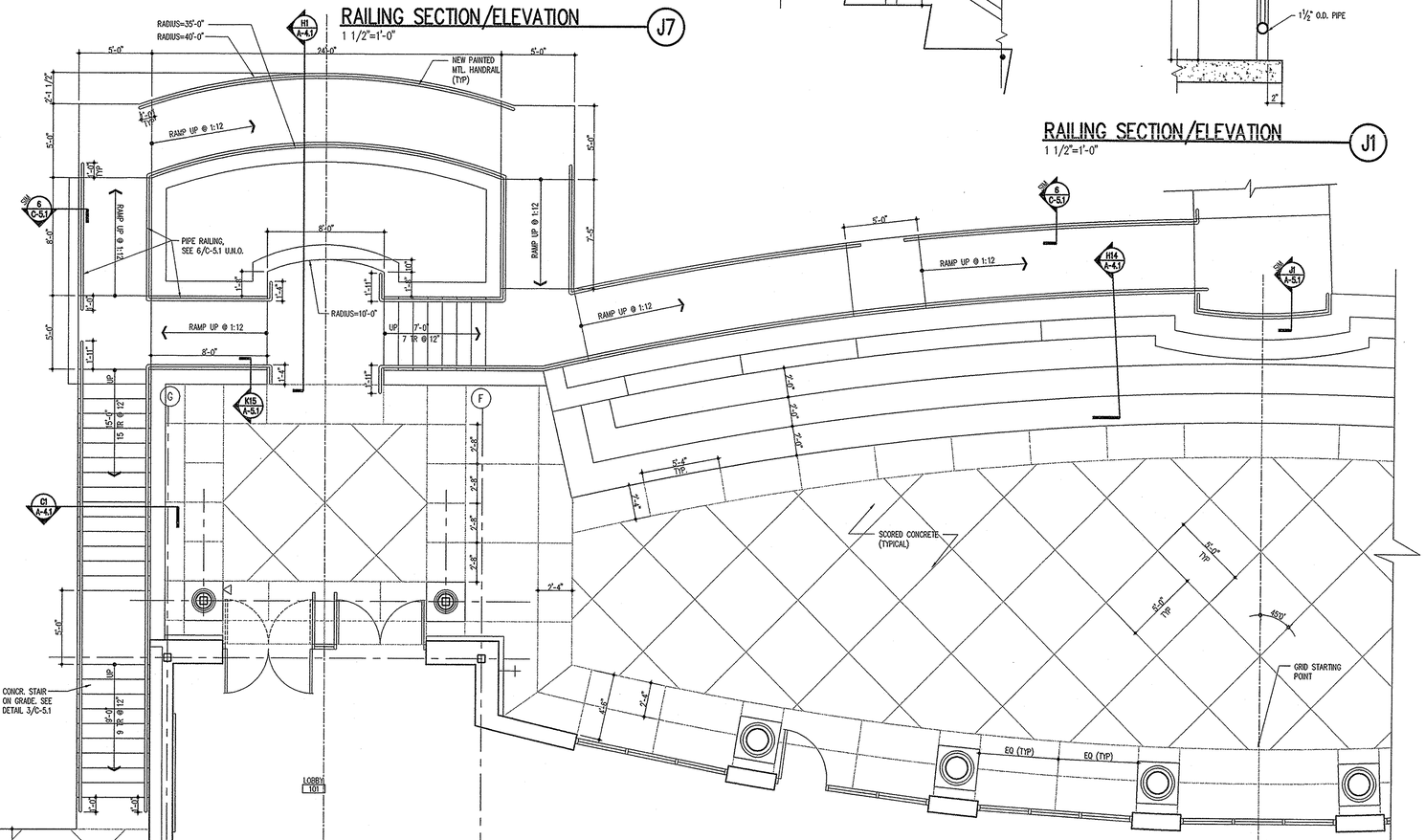

EXTERIOR STAIR/RAMP/PLAZA PLAN — C9
1/4"=1'-0"

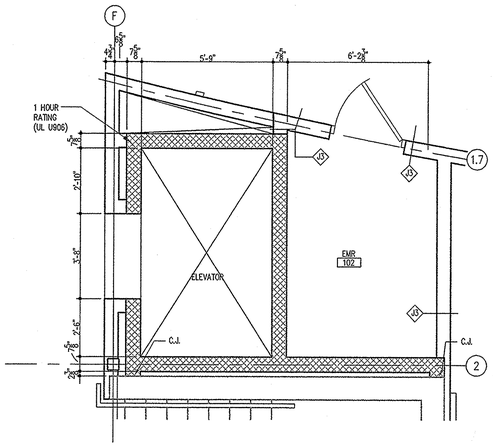

ELEVATOR - SECTION — C16
1/4"=1'-0"

ELEVATOR PLAN — A16
1/4"=1'-0"

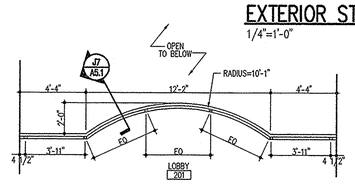

ENLARGED RAILING PLAN — A12
1/4"=1'-0"

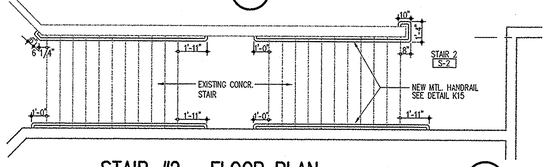

STAIR #2 - FLOOR PLAN — A7
1/4"=1'-0"

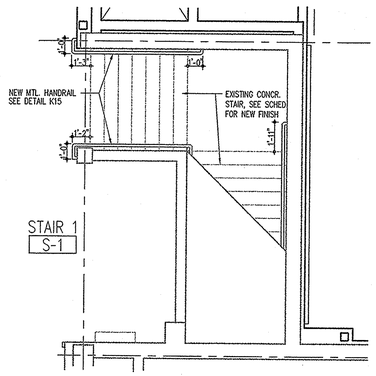

STAIR #1 - 1ST FLOOR PLAN — A4
1/4"=1'-0"

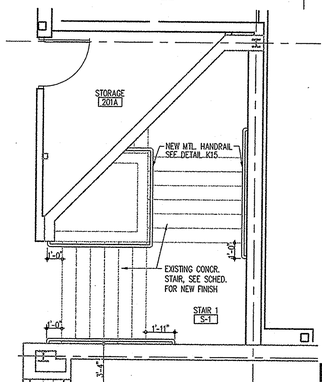

STAIR #1 - 2ND FLOOR PLAN — A1
1/4"=1'-0"

college of southern maryland
1355 Beverly Rd.
Suite 105
McLean VA 22101
703.903.9100
703.903.9755 Fax

I CERTIFY THAT THESE DOCUMENTS WERE PREPARED OR APPROVED BY ME AND THAT I AM A DULY LICENSED ARCHITECT IN THE STATE OF MARYLAND, LICENSE NO. 6080 EXPIRATION DATE 6/15/04.

Grimm and Parker Architects

STAIR AND ELEVATOR PLANS AND SECTIONS
COLLEGE OF SOUTHERN MARYLAND WELLNESS CENTER
LA PLATA, MARYLAND

DATE	DESCRIPTION
4/30/03	BID SET

© GRIMM AND PARKER,P.C. 2001

PROJECT RECORD DRAWINGS

A-5.1

DGS# - CC-09-MC99-311

RECEIVED
OCT 25 2004
ARCHITECTS

FILENAME

© GRIMM AND PARKER,P.C. 2001

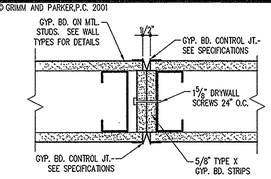

CONTROL JOINT DETAILS 16J
3"=1'-0"

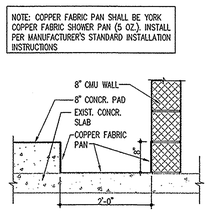

LAUNDRY TROUGH DETAIL 14J
3/4"=1'-0"

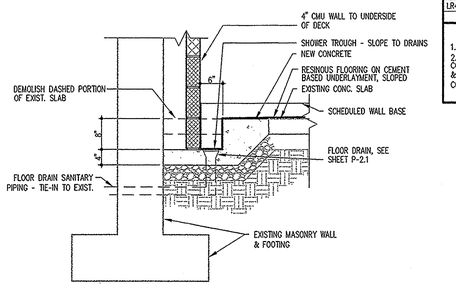

WALL SECTION - SHOWER TROUGH 11J
3/4"=1'-0"

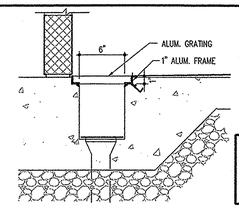

NOTE: ALUM. GRATE TO BE OHIO GRATINGS INC., OR EQUAL 11-SG1-2 SERIES WITH SLIP RESISTANT SURFACE, 1" GRATING FRAME AND GRATING CLAMP

HC TROUGH GRATE DETAIL 9J
1 1/2"=1'-0"

LOCKER ROOM SCHEDULE

ITEM	DESCRIPTION	SIZE (INCHES) W	D	H	MANUF.	MANUF. #	REMARKS
LR1	BENCH	48	9½	17½	SEE SPEC.	SEE SPEC.	
LR2	LOCKER	12	12	-	SEE SPEC.	SEE SPEC.	2
LR3	LOCKER	15	12	-	SEE SPEC.	SEE SPEC.	
LR4	LOCKER	18	12	-	SEE SPEC.	SEE SPEC.	

LOCKER REMARK NOTES
1. NOT USED
2. PROVIDE THE FOLLOWING QUANTITY OF LOCKERS IN THE LOCKER ROOMS AS SHOWN CONTRACTOR SHALL COORDINATE THE EXACT LOCATION OF THE 2 TIER LOCKERS & SINGLE TIER WITH ARCHITECT AND OWNER PRIOR TO INSTALLATION OF LOCKERS. CONTRACTOR TO ALLOW FOR 40% 2 TIER, 60% SINGLE TIER.

TOILET ACCESSORIES SCHEDULE

ITEM	ACCESSORY DESCRIPTION	MANUF.	MANUF.#	MANUF.	MANUF.#	MANUF.	MANUF.#
①	PAPER TOWEL DISPENSER	BOBRICK	B-262	A.S.I.	0210	BRADLEY	250-15
②	SOAP DISPENSER (OWNER FURN/INSTALL)	-	-	-	-	-	-
③	TOILET TISSUE DISPENSER	BOBRICK	B-288	A.S.I.	0030	BRADLEY	5402
④	GRAB BAR - 36"	BOBRICK	B-6206.99-36	A.S.I.	3201P-36	BRADLEY	8122-00136
⑤	GRAB BAR - 42"	BOBRICK	B-6206.99-42	A.S.I.	3201P-42	BRADLEY	8122-00142
⑥	SANITARY NAPKIN DISPOSAL	BOBRICK	B-254	A.S.I.	0852	BRADLEY	4722-15
⑦	MIRROR 18" X 30"	BOBRICK	B-1659-1830	A.S.I.	0620-L	BRADLEY	781-3
⑧	UTILITY SHELF W/MOP & BROOM HOLDER	BOBRICK	B-224x36	A.S.I.	8215B	BRADLEY	9954
⑨	CORNER GRAB BAR (36x36SHWR)	BOBRICK	B-62616.99	A.S.I.	3274P	BRADLEY	8122-0591833
⑩	SHOWER SEAT (LEFT HAND)	BOBRICK	B-5181	A.S.I.	8208L	BRADLEY	9565
⑪	SHOWER SEAT (RIGHT HAND)	BOBRICK	B-5171	A.S.I.	8208R	BRADLEY	9566
⑫	SHOWER CURTAIN	BOBRICK	204-2	A.S.I.	1200-V	BRADLEY	9535
⑬	SHOWER CURTAIN HOOKS	BOBRICK	204-1	A.S.I.	1200-SHU	BRADLEY	9536
⑭	SHOWER CURTAIN ROD	BOBRICK	B-207	A.S.I.	1206/1203	BRADLEY	9538
⑮	ROBE HOOK	BOBRICK	B-6717	A.S.I.	7340	BRADLEY	9114
⑯	TOWEL BAR	BOBRICK	B-205x24	A.S.I.		BRADLEY	
⑰	RECESSED PAPER TOWEL DISPENSER	BOBRICK	3904	A.S.I.	04697-4	BRADLEY	

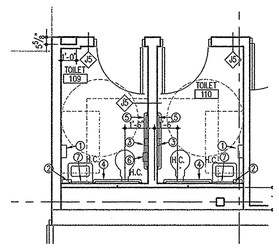

ENLARGED TOILET PLAN 8G
1/4"=1'-0"

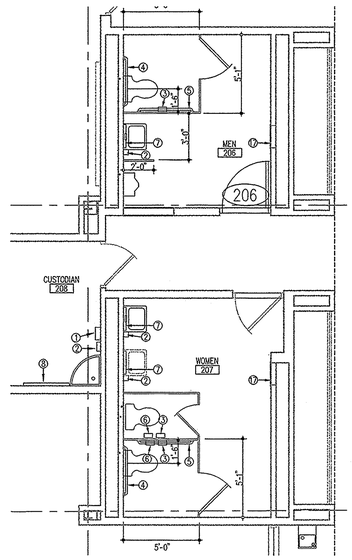

ENLARGED TOILET PLAN 5G
1/4"=1'-0"

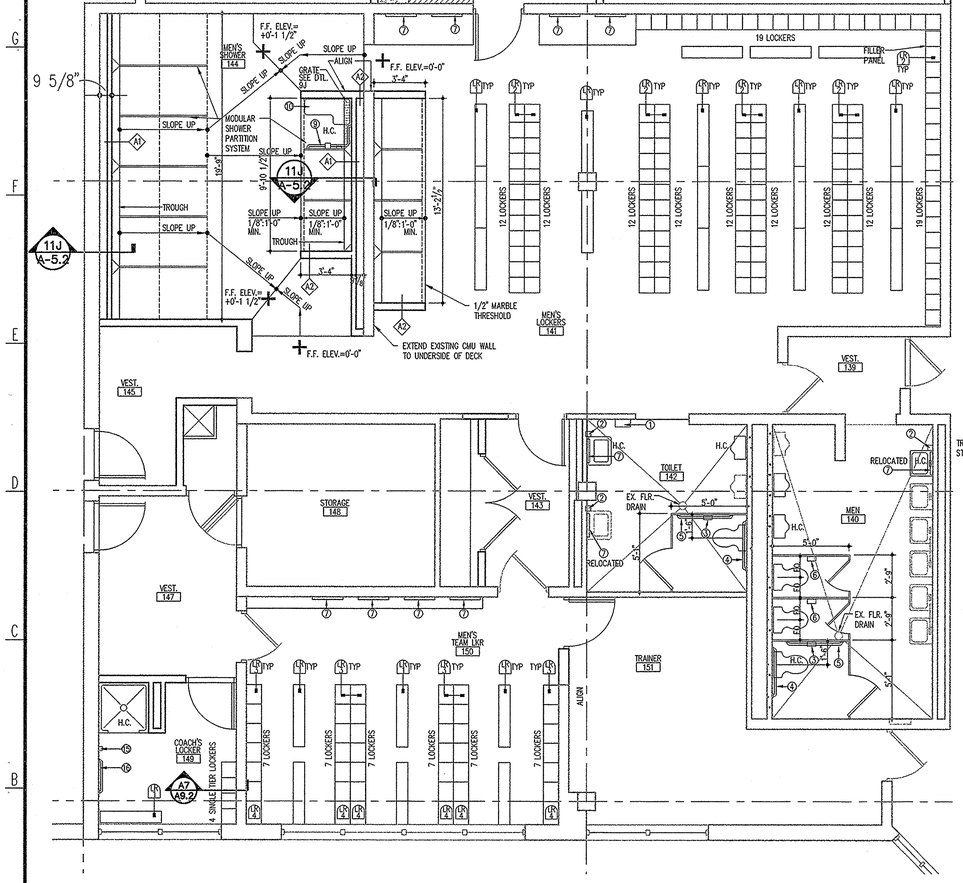

ENLARGED MEN'S TOILET/LOCKER PLAN 12A
1/4"=1'-0"

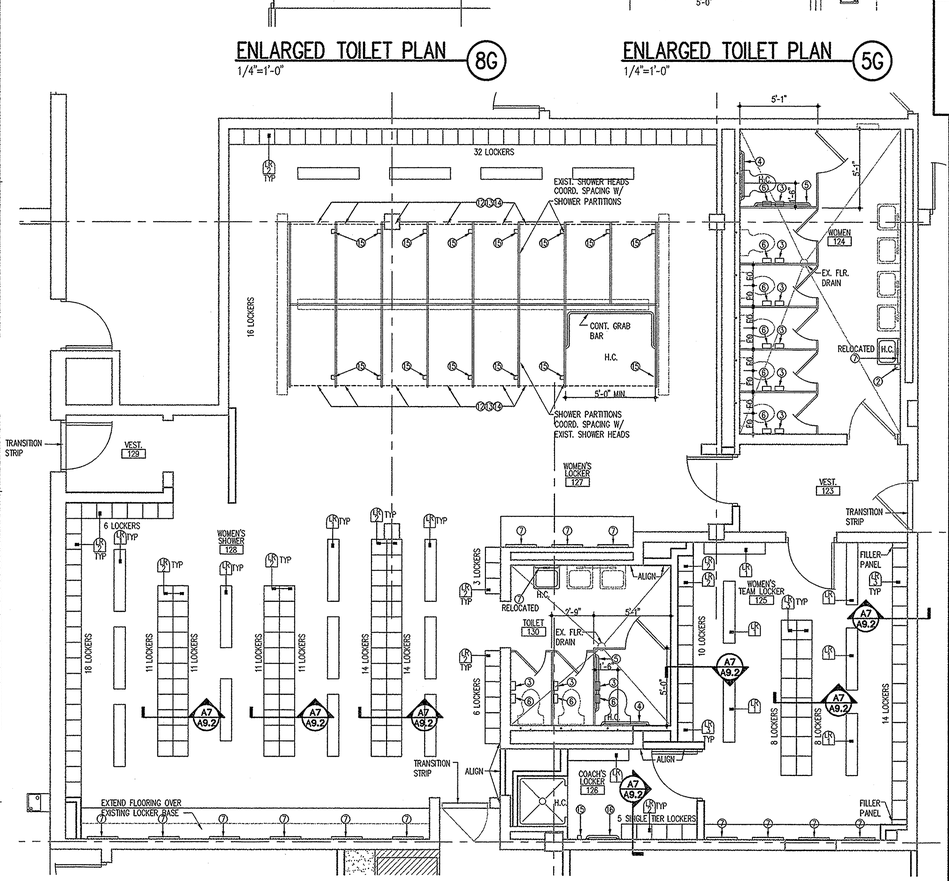

ENLARGED WOMEN'S TOILET/LOCKER PLAN 5A
1/4"=1'-0"

MOUNTING CRITERIA + HEIGHTS

	TYPICAL ADULT	ACCESSIBLE ADULT
TOILET (T.P.DISP.,GRABBARS)	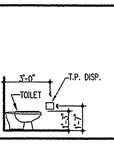	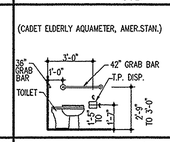 NOTE: GRABBAR DIMS. ARE SHOWN FROM CENTERLINES OF GRABBAR DIAMETER.
URINAL (URINAL SCREEN)	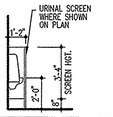	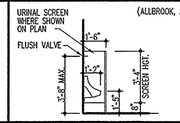
LAVATORY - WALL HUNG (SOAP DISP., MIRROR)	SAME AS ACCESSIBLE ADULT	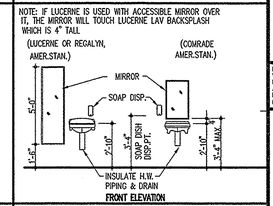
LAVATORY - COUNTERTOP MTD.	SAME AS ACCESSIBLE ADULT	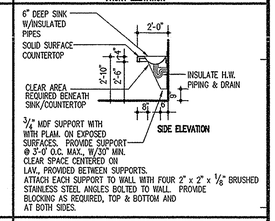
PAPER TOWEL DISPENSER	IN MOST CASES, ACCESSIBLE CHILD HEIGHTS WILL APPLY	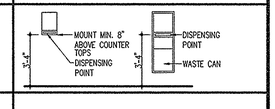
E.W.C.	 NOTE: IN MOST CASES ADULT STD. HGT. E.W.C. WILL BE MOUNTED WITH ACCESSIBLE E.W.C. TO PROVIDE BOTH LOW AND HIGH RANGES OF E.W.C.	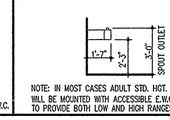 NOTE: IN MOST CASES ADULT STD. HGT. E.W.C. WILL BE MOUNTED WITH ACCESSIBLE E.W.C. TO PROVIDE BOTH LOW AND HIGH RANGES OF E.W.C.

SHOWER

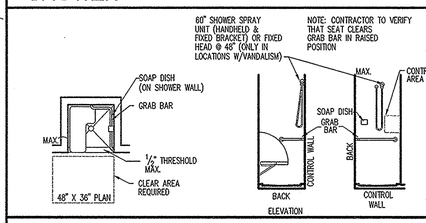

TYPICAL NOTES

1. DIMENSIONS INDICATED ARE FINISH GYP. BD. TO FINISH GYP. BD. OR FINISH MASONRY TO FINISH MASONRY.
2. WHERE ACCESSORIES (INCLUDING GRAB BARS) ARE SCHEDULED FOR WALL ATTACHMENT IN METAL STUD WALLS, PROVIDE SOLID 2X WOOD BLOCKING BETWEEN STUDS FOR ATTACHMENT.
3. AT ALL FLOOR DRAINS IN AREAS OF NEW CONCRETE SLABS, PROVIDE 18" X 18" SLOPED SUMP TO DRAIN.
4. ALL ACCESSORIES ARE SURFACE MOUNTED UNLESS NOTED OTHERWISE.
5. PROVIDE 1 PAPER TOWEL DISPENSER AND SOAP DISPENSER (ITEMS 1 & 2) AT EACH SINK LOCATION THROUGHOUT THE BUILDING.
6. NO SUBSTITUTIONS WILL BE PERMITTED FOR TOILET ACCESSORIES UNLESS WRITTEN APPROVAL IS OBTAINED FROM THE OWNERS MAINTENANCE DEPARTMENT.
7. PROVIDE UTILITY SHELF W/ MOP (ITEM 8) HOLDER IN ALL JANITOR'S CLOSETS.
8. LOCATE SANITARY NAPKIN DISPOSAL UNITS 2'-0" O.C. FROM ADJACENT WALL AND 2'-0" A.F.F. TO THE TOP OF THE UNIT. LOCATE AT ALL WOMEN'S TOILETS
9. ALL WALLS, BASE, AND FLOOR OF ALL SHOWER STALLS TO BE CERAMIC TILE.
10. ALL HANDRAIL MOUNTING SHALL COMPLY W/ ADA REQUIREMENTS
11. CENTERLINES OF ALL TOILETS IN STALLS SHALL BE EQUAL DISTANT BETWEEN PARTITIONS UNLESS DIMENSIONED OR NOTED OTHERWISE
11. WHERE TOILET ACCESSORIES FALL PARTIALLY ON THE CERAMIC TILE EITHER OMIT THE TILE UNDER THE ACCESSORY FOR A FLUSH FIT OR PROVIDE CONTINUOUS WOOD BLOCKING THE THICKNESS OF TILE BEHIND THE PERIMETER OF THE ACCESSORY RUNNING OVER THE PART WITH NO TILE. WOOD TO BE PAINTED BLACK.

PROJECT RECORD DRAWINGS

RECEIVED OCT 25 2004

College of Southern Maryland
1355 Beverly Rd.
Suite 105
McLean VA 22101
703.903.9100
703.903.9755 Fax

Grimm and Parker Architects

I CERTIFY THAT THESE DOCUMENTS WERE PREPARED OR APPROVED BY ME AND THAT I AM A DULY LICENSED ARCHITECT IN THE STATE OF MARYLAND, LICENSE NO. 9080 EXPIRATION DATE 6/10/04.

ENLARGED TOILET PLANS AND PLAN DETAILS
COLLEGE OF SOUTHERN MARYLAND WELLNESS CENTER
LA PLATA, MARYLAND

DATE	DESCRIPTION
4/30/03	BID SET

© GRIMM AND PARKER,P.C. 2001

A-5.2

DGS# - CC-09-MC99-311

2010GA52.DWG

© GRIMM AND PARKER,P.C. 2001

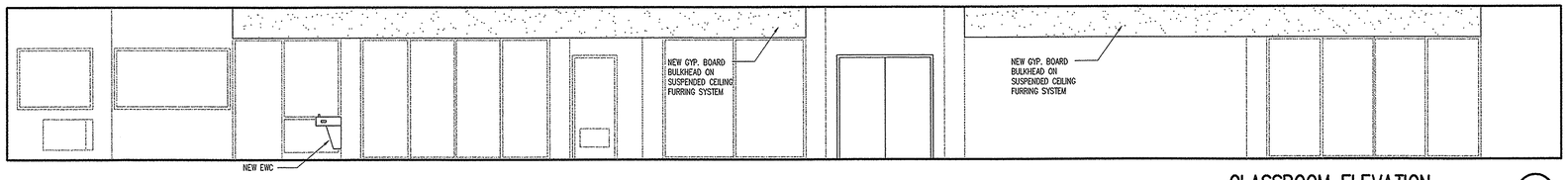

CLASSROOM ELEVATION L1
1/4"=1'-0"

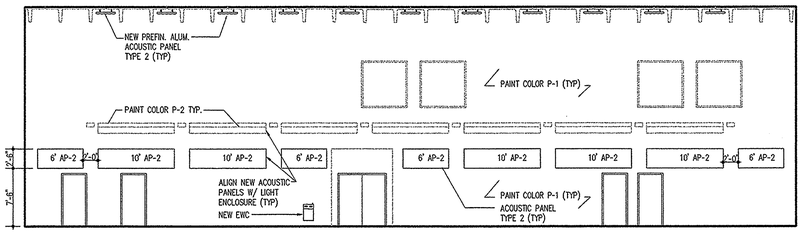

POOL ELEVATION J13
1/8"=1'-0"

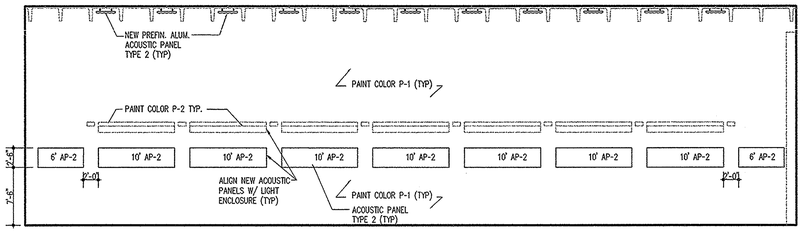

POOL ELEVATION H13
1/8"=1'-0"

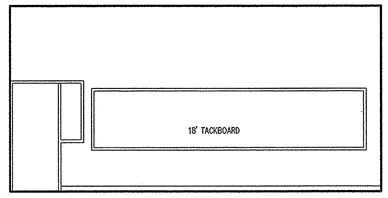

CLASSROOM ELEVATION H9
1/4"=1'-0"

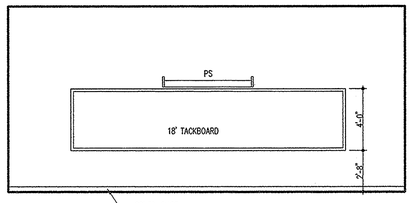

CLASSROOM ELEVATION H5
1/4"=1'-0"

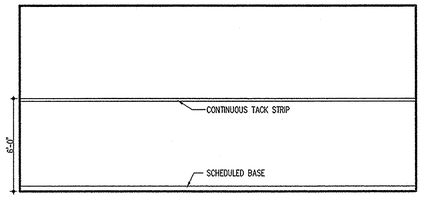

CLASSROOM ELEVATION H1
1/4"=1'-0"

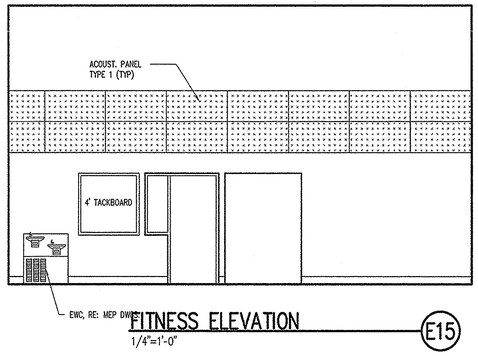

FITNESS ELEVATION E15
1/4"=1'-0"

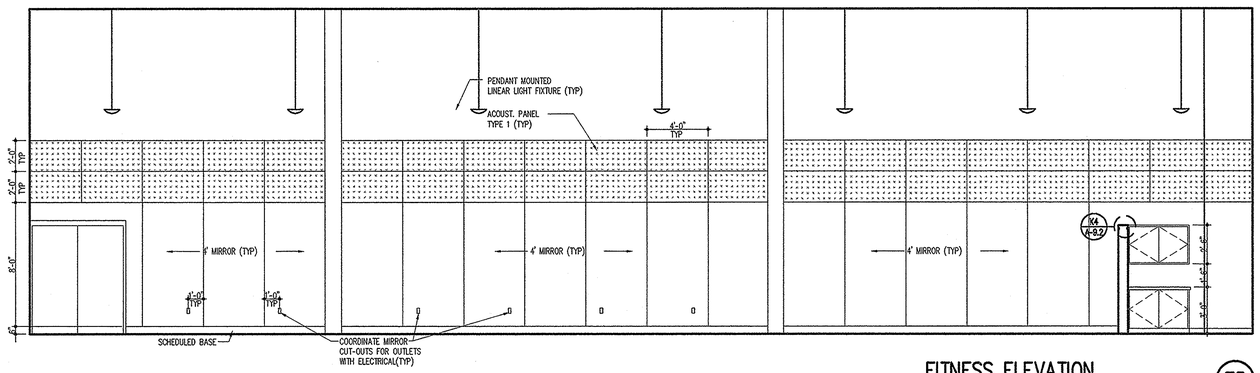

FITNESS ELEVATION E5
1/4"=1'-0"

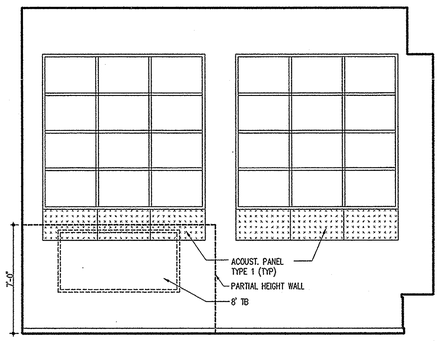

FITNESS ELEVATION E1
1/4"=1'-0"

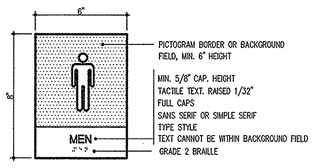

REST ROOM SIGN DETAIL 16B
3"=1'-0"

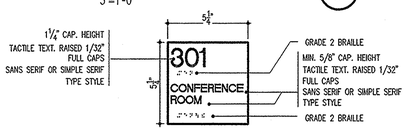

TYPICAL SIGN DETAIL 16A
3"=1'-0"

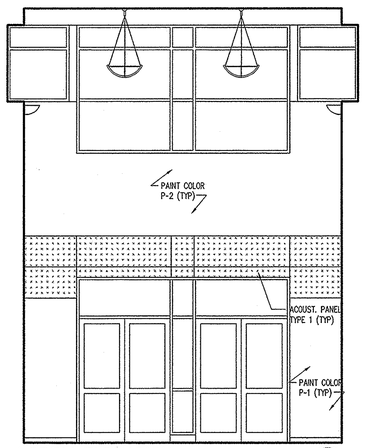

LOBBY ELEVATION A13
1/4"=1'-0"

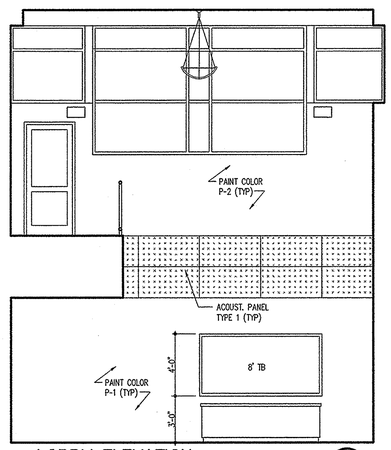

LOBBY ELEVATION A9
1/4"=1'-0"

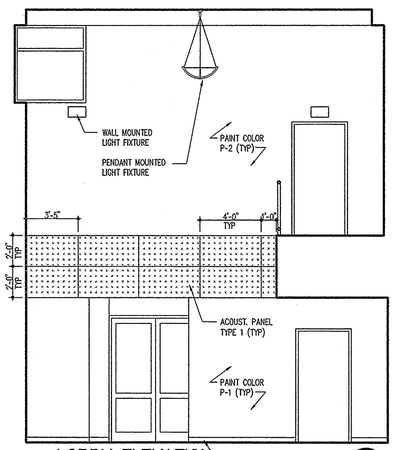

LOBBY ELEVATION A5
1/4"=1'-0"

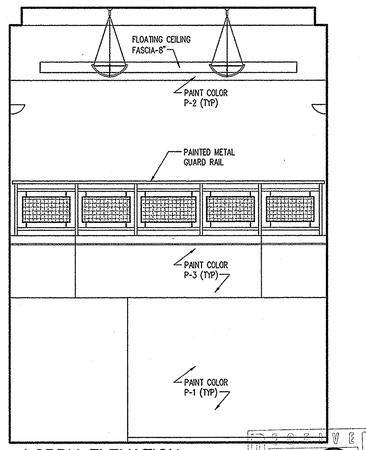

LOBBY ELEVATION A1
1/4"=1'-0"

20106A61.DWG

college of southern maryland

Grimm and Parker Architects

1355 Beverly Rd.
Suite 105
McLean VA 22101
703.903.9100
703.903.9755 Fax

I CERTIFY THAT THESE DOCUMENTS WERE PREPARATED OR APPROVED BY ME AND THAT I AM A DULY LICENSED ARCHITECT IN THE STATE OF MARYLAND, LICENSE NO. 9080 EXPIRATION DATE 6/10/04.

INTERIOR ELEVATIONS
COLLEGE OF SOUTHERN MARYLAND WELLNESS CENTER
LA PLATA, MARYLAND

DATE	DESCRIPTION
4/30/03	BID SET

© GRIMM AND PARKER,P.C. 2001

PROJECT RECORD DRAWINGS

A-6.1

DGS# - CC-09-MC99-311

© GRIMM AND PARKER,P.C. 2001

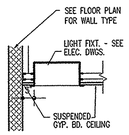

LIGHTING @ TOILET ROOMS J17
3/4"=1'-0"

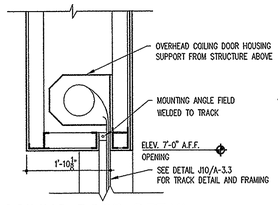

COILING DOOR DETAIL J14
3/4"=1'-0"

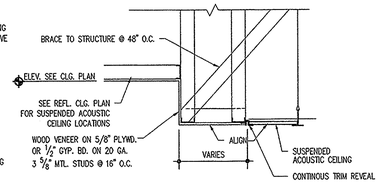

TYPICAL BULKHEAD DETAIL J11
3/4"=1'-0"

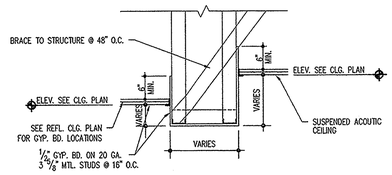

TYPICAL BULKHEAD DETAIL J8
3/4"=1'-0"

NOT USED J5
3/4"=1'-0"

0 1' 2' 4'
SCALE: 3/4" = 1'-0"

GENERAL NOTES (APPLY TO SHEET A-7.1)

1. REFER TO ELECTRICAL DRAWINGS FOR LIGHT LAYOUT PATTERN. AND EXIT LIGHT LOCATIONS.
2. ALL WALLS SHOWN EXTEND TO THE STRUCTURAL DECK (SEE WALL TYPES) @ CHASE WALLS EXTEND ONE WYTHE 4" ABOVE THE CEILING
3. REFER TO MECHANICAL, ELECTRICAL, AND PLUMBING DRAWINGS FOR ITEMS NOT SHOWN ON CEILING PLAN. GRILLES, SPEAKERS, SPRINKLERS, HEAT & SMOKE DETECTORS, SHALL BE CENTERED IN TILES UNLESS NOTED OTHERWISE.
4. ALL BULKHEAD DIMENSIONS ARE FROM FINISH FACE OF WALL OR BULKHEAD TO FINISH FACE OF BULKHEAD.
5. SEE FINISH SCHEDULE ON SHEET A-3.1 FOR CEILING HEIGHTS NOT INDICATED ON A-7.1
6. PROVIDE 1/2" REVEALS BETWEEN DISSIMILAR MATERIALS IN THE SAME PLANE AT THE CEILINGS.

KEY

- WALL MTD. LIGHT FIXTURE
- WALL MTD. FLUORESCENT LIGHT FIXTURE
- FLUORESCENT LIGHT FIXTURE, SEE ELECT. DWGS.
- DOWNLIGHT, SEE ELECT. DWG.
- SUSPENDED FLUORESCENT LIGHT FIXTURE, 9'-0" A.F.F. UNLESS OTHERWISE NOTED; PARALLEL TO FLOOR
- FLUORESCENT LIGHT FIXTURE W/ BAFFELS, RE: ELEC. DWG'S
- LINEAR SUSPENDED FLOURESCENT LIGHT FIXTURE, SEE ELECT. DWG.
- GYPSUM BOARD CEILING, SOFFIT; OR BULKHEAD.
- 2x2 SUSPENDED ACOUSTIC CEILING, SEE FINISH SCHEDULE FOR TYPE
- 2x2 SUSPENDED ACOUSTIC CEILING, ROTATED 45° SEE SCHEDULE FOR TYPE
- 2x4 SUSPENDED ACOUSTIC CEILING, SEE FINISH SCHEDULE FOR TYPE
- WOOD CEILING
- PERFORATED ALUM. PANEL CEILING
- EXPOSED STRUCTURE PAINTED
- EXTERIOR SOFFIT
- SUPPLY, RE: MECH. DWG'S
- RETURN, RE: MECH. DWG'S
- EXIT LIGHT, RE: ELEC. DWG'S
- EMERGENCY LIGHT, RE: ELEC. DWG'S
- # REMARKS NOTES SEE SHEET A-7.2
- DIRECTION OF SLOPE CEILING (FROM HIGH POINT TO LOW POINT) HIGH LOW
- PROJECTOR MOUNT

DIFFUSER/ABSORBER PANEL SCHEDULE

AC	30" X 120" ACOUSTIC CEILING PANEL

Ceiling height 10'0 AFF

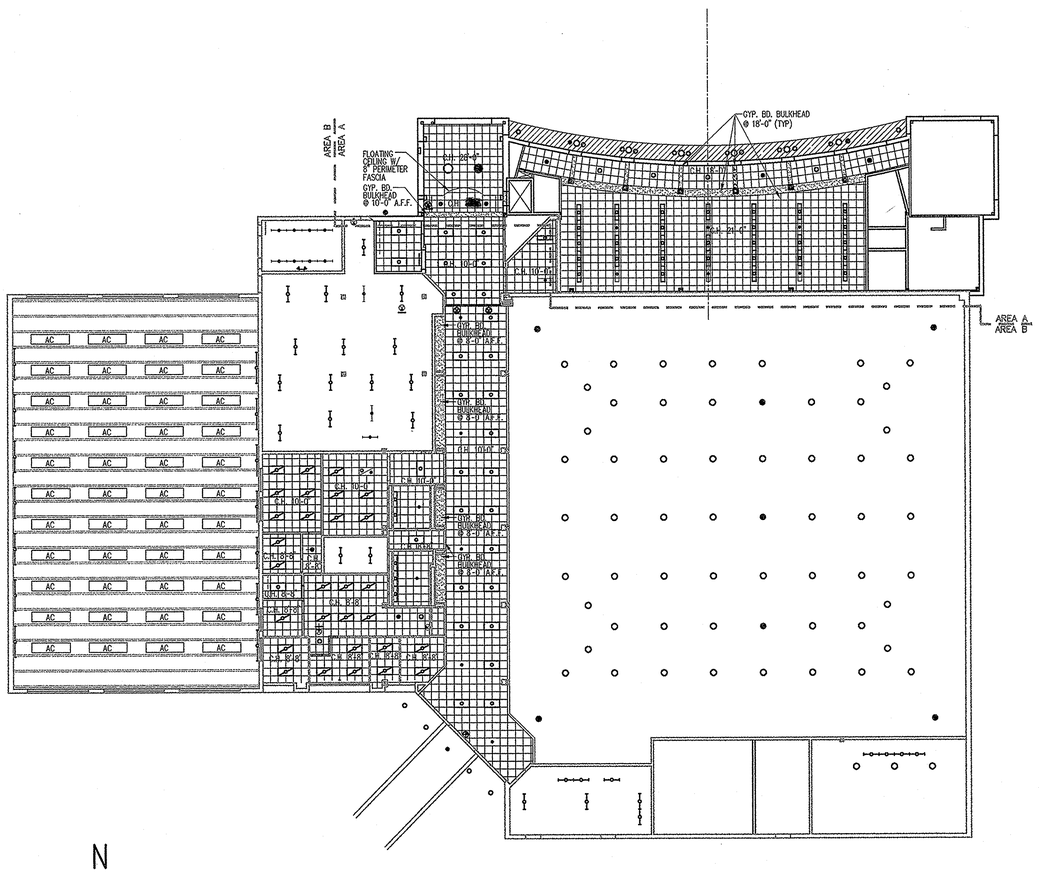

SECOND FLOOR REFLECTED CEILING PLAN F6
1/16"=1'-0"

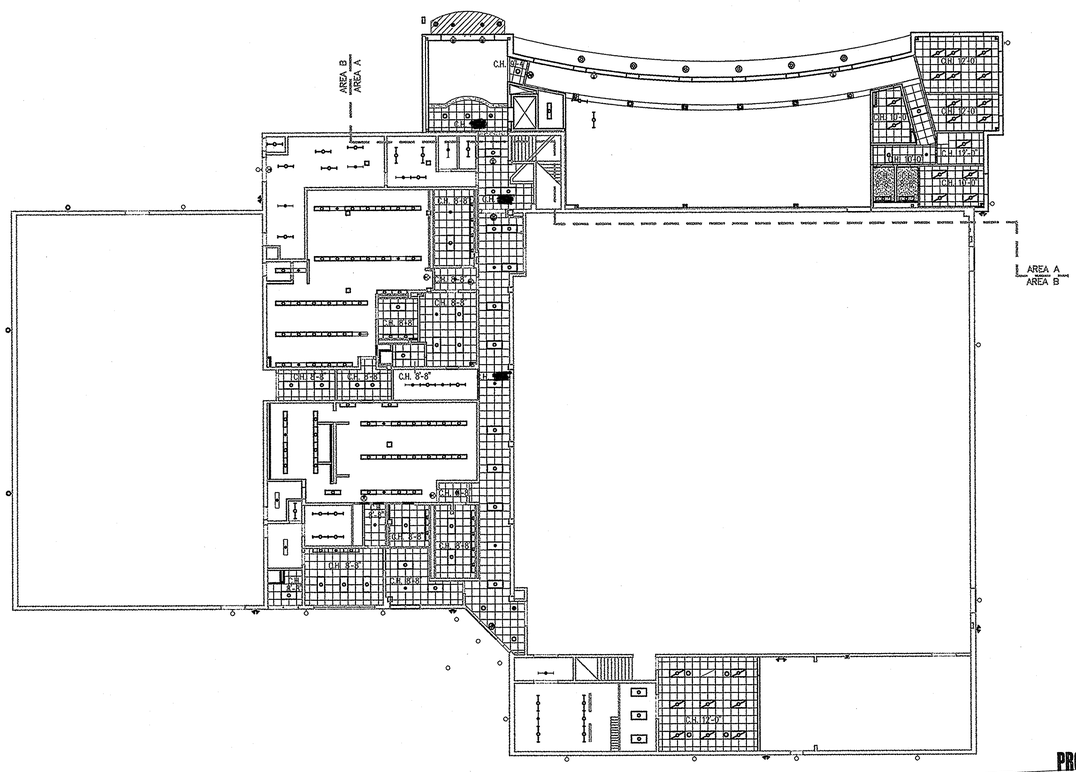

FIRST FLOOR REFLECTED CEILING PLAN B6
1/16"=1'-0"

0 8' 16' 32'
SCALE: 1/16" = 1'-0"
9919\9919A-71.DWG

N

RECEIVED OCT 25 2004

College of Southern Maryland
1355 Beverly Rd.
Suite 105
McLean VA 22101
703.903.9100
703.903.9755 Fax

I CERTIFY THAT THESE DOCUMENTS WERE PREPARED OR APPROVED BY ME AND THAT I AM A DULY LICENSED ARCHITECT IN THE STATE OF MARYLAND, LICENSE NO. 9060 EXPIRATION DATE 6/10/04.

Grimm and Parker Architects

REFLECTED CEILING PLANS AND DETAILS
COLLEGE OF SOUTHERN MARYLAND WELLNESS CENTER
LA PLATA, MARYLAND

DATE	DESCRIPTION
4/30/03	BID SET

© GRIMM AND PARKER,P.C. 2001

PROJECT RECORD DRAWINGS

A-7.1

DGS# - CC-09-MC99-311

© GRIMM AND PARKER,P.C. 2001

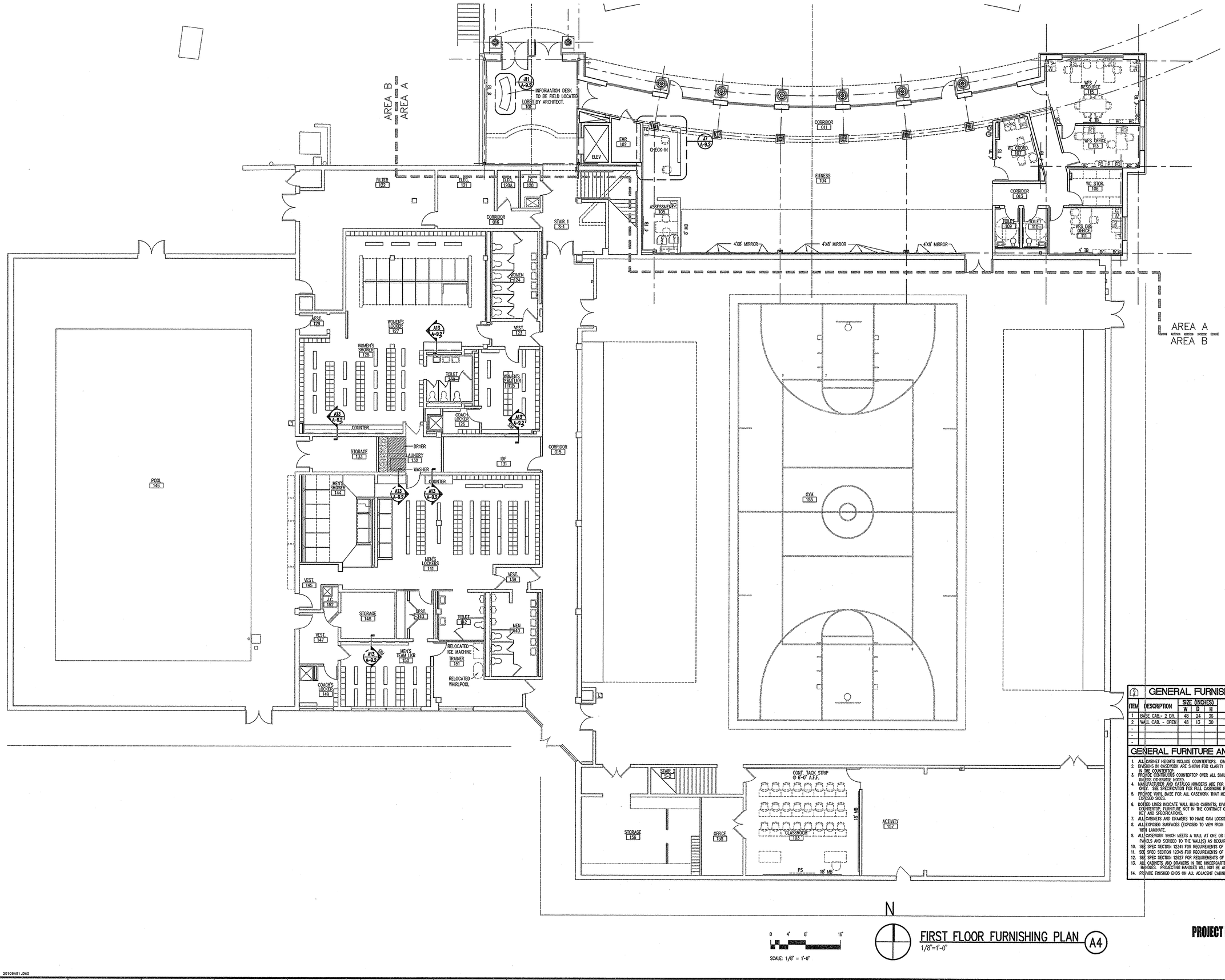

GENERAL FURNISHING SCHEDULE

ITEM	DESCRIPTION	SIZE (INCHES) W	D	H	MANUF.	MFR. #	REMARKS
1	BASE CAB.- 2 DR.	48	24	36	LSI	1001	-
2	WALL CAB. - OPEN	48	13	30	LSI	3050	-
-							
-							
-							

GENERAL FURNITURE AND EQUIP. NOTES

1. ALL CABINET HEIGHTS INCLUDE COUNTERTOPS. DIMENSIONS ARE TO THE NEAREST INCH.
2. DIVISIONS IN CASEWORK ARE SHOWN FOR CLARITY AND DO NOT REPRESENT BREAKS IN THE COUNTERTOP.
3. PROVIDE CONTINUOUS COUNTERTOP OVER ALL SIMILAR HEIGHT CASEWORK, UNLESS OTHERWISE NOTED.
4. MANUFACTURER AND CATALOG NUMBERS ARE FOR REFERENCE AND ILLUSTRATION PURPOSES ONLY. SEE SPECIFICATION FOR FULL CASEWORK REQUIREMENTS.
5. PROVIDE VINYL BASE FOR ALL CASEWORK THAT MEETS THE FLOOR ON FRONT AND ALL EXPOSED SIDES.
6. DOTTED LINES INDICATE WALL HUNG CABINETS, DIVISIONS OF BASE CABINETS BELOW THE COUNTERTOP, FURNITURE NOT IN THE CONTRACT OR PROJECTION SCREENS - SEE CASEWORK KEY AND SPECIFICATIONS.
7. ALL CABINETS AND DRAWERS TO HAVE CAM LOCKS EXCEPT FOR SINK BASE CABINETS.
8. ALL EXPOSED SURFACES (EXPOSED TO VIEW FROM ANY PERSPECTIVE) TO BE COVERED WITH LAMINATE.
9. ALL CASEWORK WHICH MEETS A WALL AT ONE OR BOTH ENDS, TO BE PROVIDED WITH FILLER PANELS AND SCRIBED TO THE WALL(S) AS REQUIRED.
10. SEE SPEC SECTION 12341 FOR REQUIREMENTS OF EDUCATIONAL CASEWORK.
11. SEE SPEC SECTION 12345 FOR REQUIREMENTS OF LABORATORY CASEWORK.
12. SEE SPEC SECTION 12827 FOR REQUIREMENTS OF LIBRARY SHELVING.
13. ALL CABINETS AND DRAWERS IN THE KINDERGARTEN ROOMS TO BE PROVIDED WITH RECESSED HANDLES. PROJECTING HANDLES WILL NOT BE ACCEPTABLE
14. PROVIDE FINISHED ENDS ON ALL ADJACENT CABINETS WHERE ENDS ARE EXPOSED.

FIRST FLOOR FURNISHING PLAN (A4)
1/8"=1'-0"

PROJECT RECORD DRAWINGS

RECEIVED
OCT 25 2024
CPE ASSOC.

20108A01.DWG

college of southern maryland

Grimm and Parker Architects
1355 Beverly Rd.
Suite 105
McLean VA 22101
703.903.9100
703.903.9755 Fax

I CERTIFY THAT THESE DOCUMENTS WERE PREPARED OR APPROVED BY ME AND THAT I AM A DULY LICENSED ARCHITECT IN THE STATE OF MARYLAND, LICENSE NO. 9080 EXPIRATION DATE 4/10/04.

FIRST FLOOR FURNISHING PLAN

COLLEGE OF SOUTHERN MARYLAND WELLNESS CENTER
LA PLATA, MARYLAND

DATE	DESCRIPTION
4/30/03	BID SET

© GRIMM AND PARKER,P.C. 2001

A-9.1

DGS# - CC-09-MC99-311

© GRIMM AND PARKER,P.C. 2001

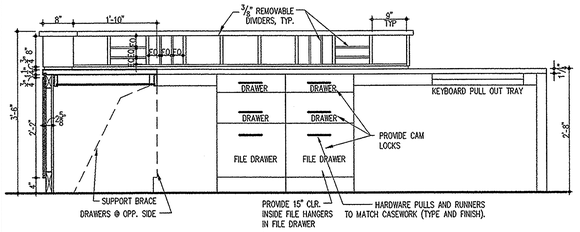

FITNESS DESK SECTION/ELEVATION K17
3/4"=1'-0"

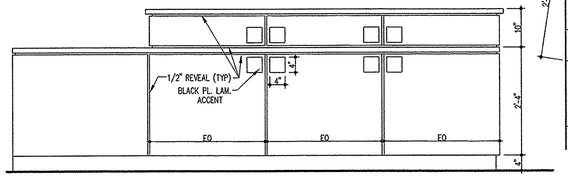

FITNESS DESK SECTION/ELEVATION K11
3/4"=1'-0"

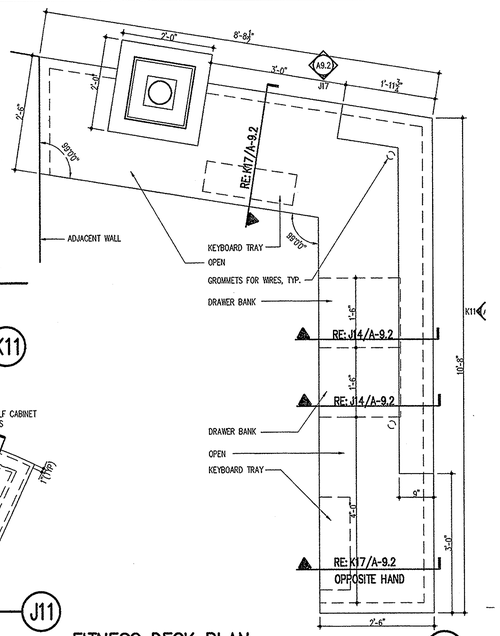

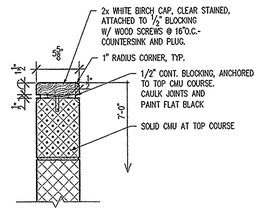

LOW WALL CAP DETAIL K4
1 1/2" = 1'-0"

GENERAL MILLWORK NOTES

1. MILLWORK DRAWINGS ARE DIAGRAMATIC IN NATURE. ALL WORK IS TO BE DONE IN ACCORDANCE WITH SPECIFICATION SECTION 06400. CONSTRUCTION DETAILS ARE TO BE SUBMITTED IN SHOP DRAWINGS AND ARE SUBJECT TO THE APPROVAL OF THE ARCHITECT.
2. CONTRACTOR TO FIELD VERIFY ALL CLEAR OPENINGS PRIOR TO MILLWORK FABRICATION
3. NO BUTT JOINTS ALLOWED. ALL CONNECTIONS TO BE DADOED, CONTINUOUS SPLINE, TENONED OR BISCUIT JOINED.
4. ALL EXPOSED SURAFACES SHALL BE COVERED WITH PLASTIC LAMINATE U.N.O.
5. SHELVES, DOORS, SIDES AND TOPS OF ALL LOCKERS AND CUBBY UNITS TO BE 3/4" PLYWOOD U.N.O.
6. PROVIDE TWO (2) HINGES PER DOOR. HINGES TO BE FIVE (5) KNUCKLE HOISPITAL HINGES. TYP. ALL DOORS SHOWN ON THIS SHEET U.N.O.

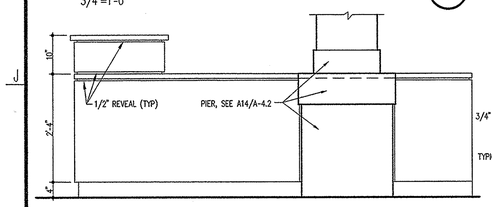

FITNESS DESK ELEVATION J17
3/4"=1'-0"

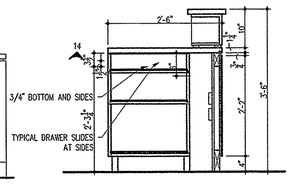

FITNESS DESK SECTION J14
3/4"=1'-0"

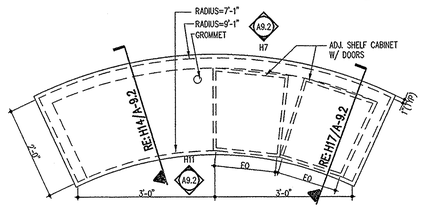

INFORMATION DESK PLAN J11
3/4"=1'-0"

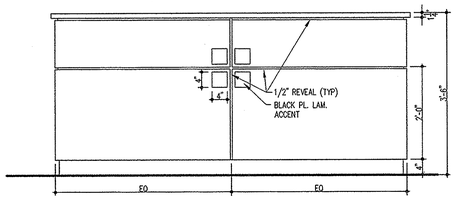

FITNESS DESK PLAN J7
3/4"=1'-0"

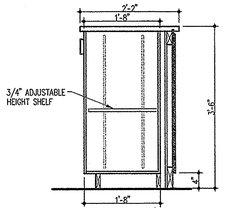

INFO. DESK SECTION H17
3/4"=1'-0"

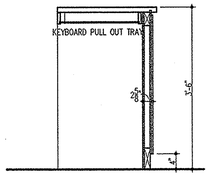

INFO DESK SECTION H14
3/4"=1'-0"

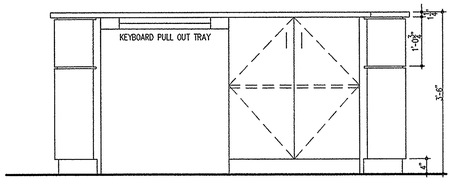

INFORMATION DESK ELEVATION H11
3/4"=1'-0"

INFORMATION DESK ELEVATION H7
3/4"=1'-0"

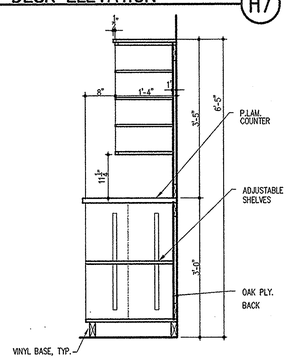

MAILBOXES - SECTION E7
3/4"=1'-0"

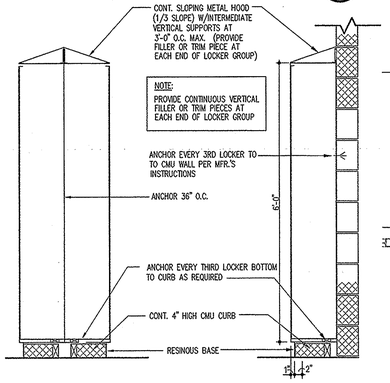

DETAIL - LOCKER A7
3/4"=1'-0"

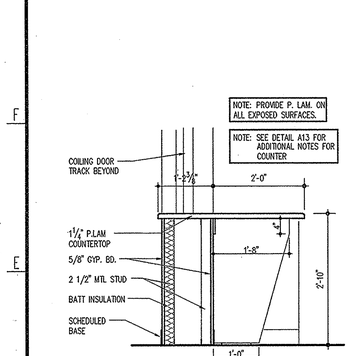

CONCESSIONS COUNTER DTL. E17
3/4"=1'-0"

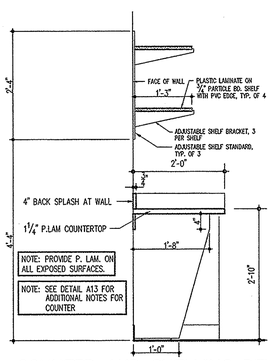

COUNTER AND SHELVING DTL. E13
3/4"=1'-0"

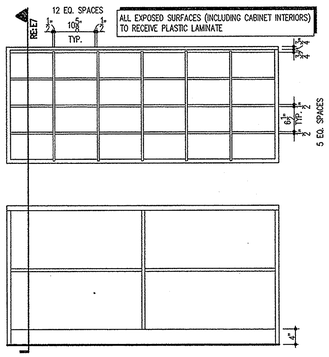

MAILBOXES - ELEVATION E8
3/4"=1'-0"

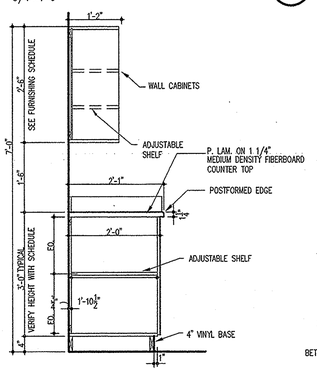

BASE/WALL CABINET DETAIL A17
3/4"=1'-0"

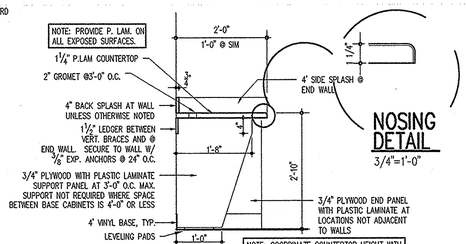

TYP. COUNTER DTL. A13
3/4"=1'-0"

NOSING DETAIL
3/4"=1'-0"

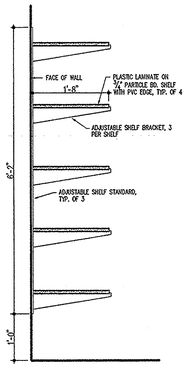

ADJUSTABLE SHELVING DETAIL A10
3/4"=1'-0"

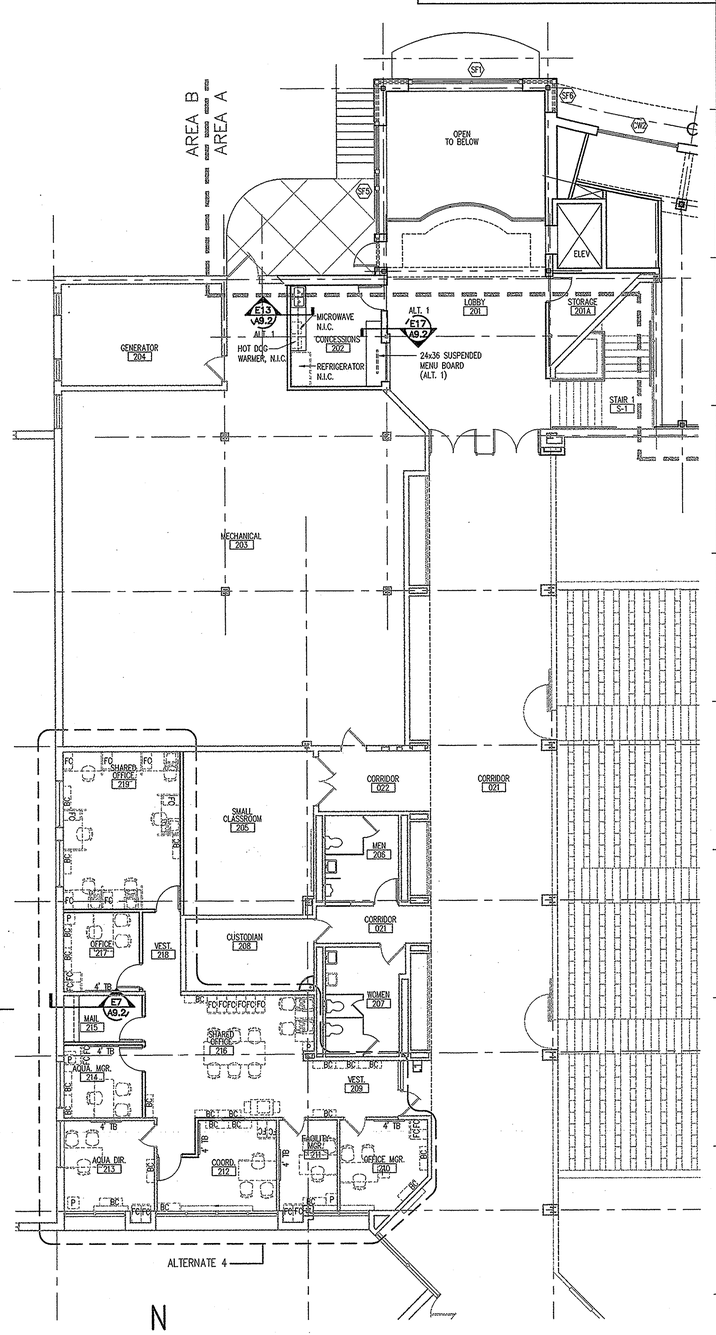

SECOND FLOOR FURNISHING PLAN A4
1/8"=1'-0"

N

SCALE: 1/8" = 1'-0"

OCT 25 2004

college of southern maryland
Grimm and Parker Architects
1355 Beverly Rd.
Suite 105
McLean VA 22101
703.903.9100
703.903.9755 Fax

I CERTIFY THAT THESE DOCUMENTS WERE PREPARED OR APPROVED BY ME AND THAT I AM A DULY LICENSED ARCHITECT IN THE STATE OF MARYLAND, LICENSE NO. 9080 EXPIRATION DATE 6/10/04.

SECOND FLOOR FURNISHING PLAN
COLLEGE OF SOUTHERN MARYLAND WELLNESS CENTER
LA PLATA, MARYLAND

DATE	DESCRIPTION
4/30/03	BID SET

© GRIMM AND PARKER,P.C. 2001

PROJECT RECORD DRAWINGS

A-9.2

DGS# - CC-09-MC99-311

20106A92.DWG

© GRIMM AND PARKER,P.C. 1999

DEMOLITION NOTES:

LOD WITHIN LIMIT OF DISTURBANCE REMOVE ALL VEGETATION AND ROOT MATERIAL. STRIP & STOCK PILE TOPSOIL WHERE INDICATED ON SEDIMENT CONTROL PLAN.

D-1 SAW CUT & REMOVE CONCRETE WALK TO NEAREST JOINT
D-2 REMOVE EXISTING HANDRAIL
D-3 REMOVE EXISTING STORM DRAIN
D-4 REMOVE EXISTING MANHOLE
D-5 REMOVE EXISTING WATERLINE
D-6 SAWCUT & REMOVE EXISTING CURB TO NEAREST JOINT & PAVING

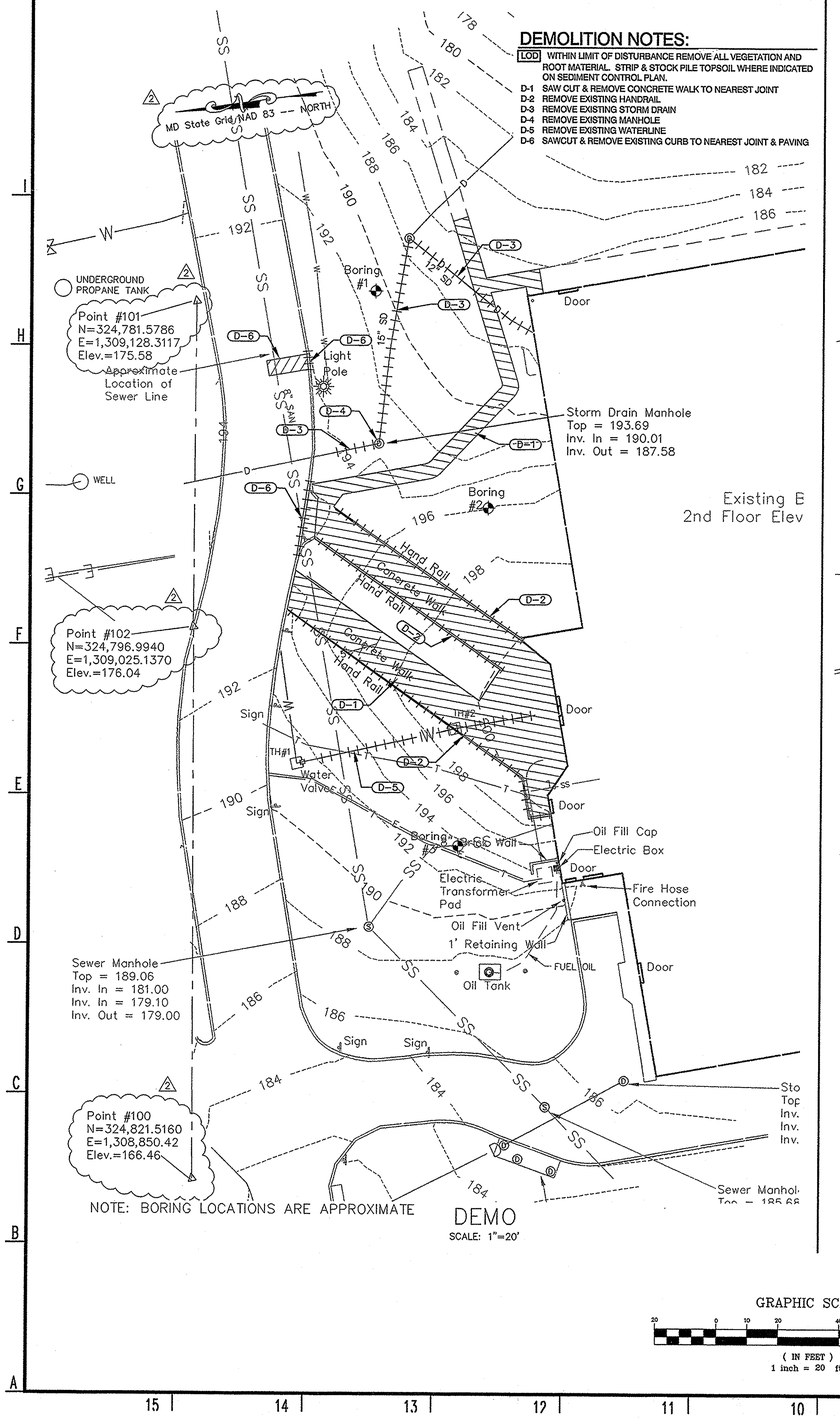

NOTE: BORING LOCATIONS ARE APPROXIMATE

DEMO
SCALE: 1"=20'

CONSTRUCTION NOTES:

N-1 MEET EXISTING CONDITIONS.
N-2 NEW CONCRETE WALK. SEE DETAIL 4, SHEET C-5.1
N-3 NEW HANDRAIL. SEE DETAIL 6, SHEET C-5.1
N-4 NEW PEDESTRIAN RAMP. SEE DETAIL 7, SHEET C-5.1
N-5 NEW TRENCH DRAIN REPAIR. SEE DETAIL 1, SHEET C-5.1
N-6 NEW PLANTER WALLS, SEE ARCHITECTURAL PLANS
N-7 NEW RETAINING WALL. SEE ARCHITECTURAL PLANS
N-8 NEW CONCRETE CURB. SEE DETAIL 2, SHEET C-5.1
N-9 NEW CONCRETE STEPS WITH HANDRAIL. SEE DETAIL 3, SHEET C-5.1

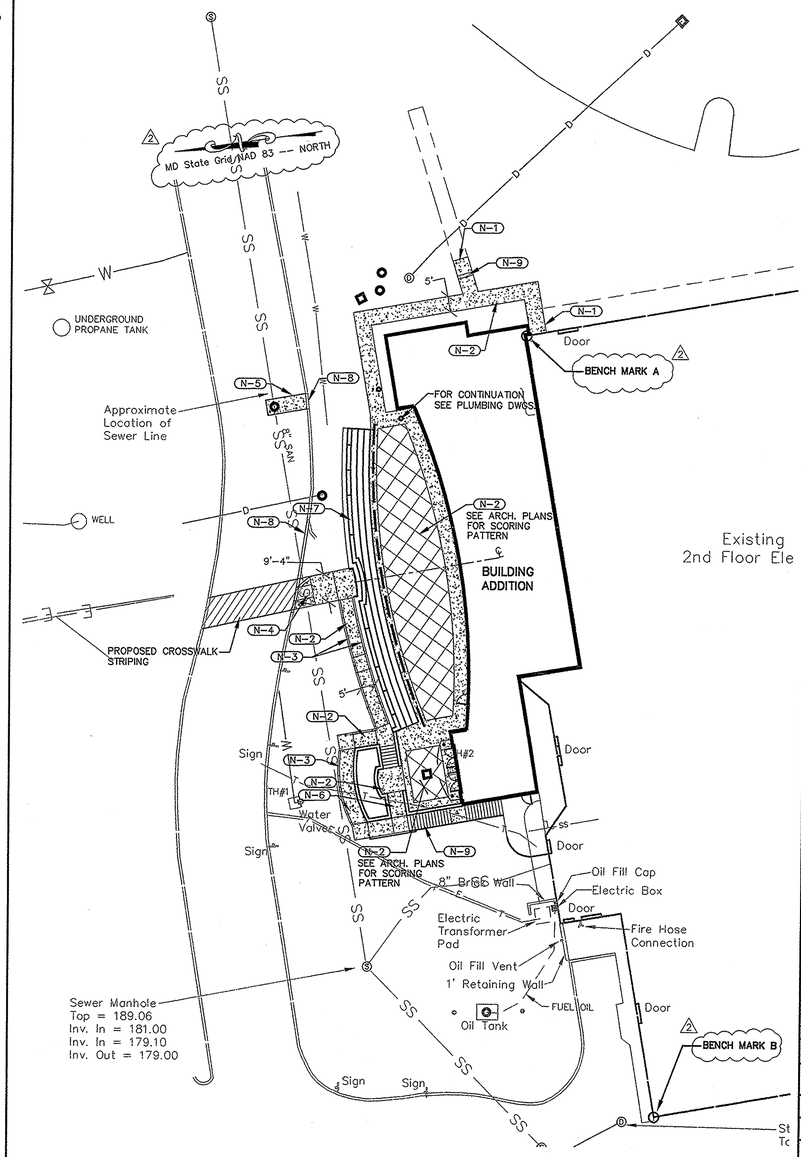

LAYOUT PLAN
SCALE: 1"=20'

GRAPHIC SCALE
20 0 10 20 40 60
(IN FEET)
1 inch = 20 ft.

CHARLES COUNTY GOVERNMENT

Department of Planning and Growth Management
Development Services Department

APPROVED FOR:	signatures	construction date	as-builts date	as-builts initials
FLOODPLAINS		/ /	/ /	
GRADING		/ /	/ /	
ROADS		/ /	/ /	
STORM DRAINAGE		/ /	/ /	
STORM WATER MANAGEMENT		/ /	/ /	
WATER & SEWER		/ /	/ /	
OTHER		/ /	/ /	

Conditions and/or Remarks:
This approval expires two years from the date of issuance. Request of extensions must be made in writing and received by the development services department before the expiration date.

EXPIRATION DATE / /

Rev. No.	CONSTRUCTION REVISION

ENGINEERS:
Consulting Engineers
6715 Whittier Avenue 3rd Floor (703) 288-9550
Mc Lean, Virginia 22101 (703) 288-9555 (FAX)
WHITNEY, BAILEY, COX & MAGNANI, LLP

PGM # VC 02-0028

DRAWING:
PROJECT RECORD DRAWINGS

RECEIVED OCT 25 2004 C-2.1 CHF ASSOC.

Design: C.K./K.H./S.S.		
Draft: K.D./E.S.	DATE: 02/05/02	DWG #:
Checked: C.K./J.K.	SCALE:	

04/30/03
BID SET

1355 Beverly Road
Suite 105
McLean VA 22101
703.903.9100
703.903.9755 Fax

Grimm and Parker Architects

DEMO/LAYOUT PLANS
COLLEGE OF SOUTHERN MARYLAND WELLNESS CENTER
LA PLATA, MARYLAND

DATE	DESCRIPTION
3-8-02	BORINGS
5-2-02	SURVEY 2

© GRIMM AND PARKER,P.C. 1999

© GRIMM AND PARKER,P.C. 1999

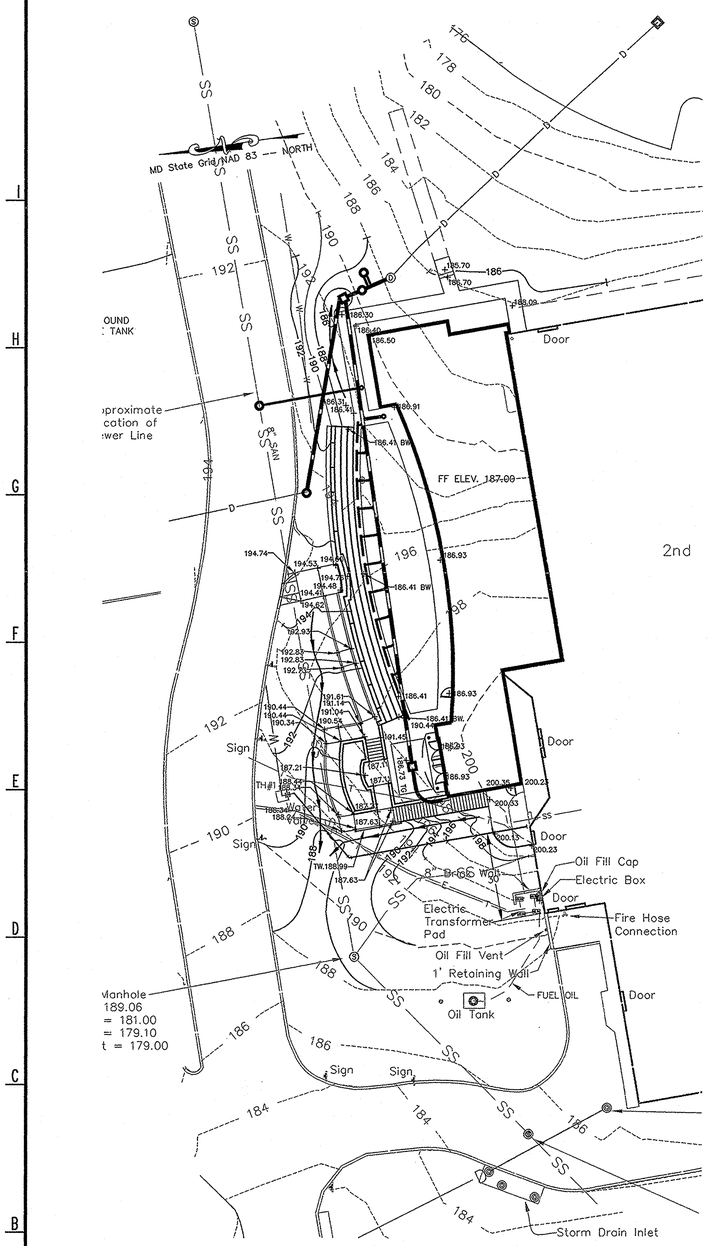

GRADING PLAN
SCALE: 1" = 20'

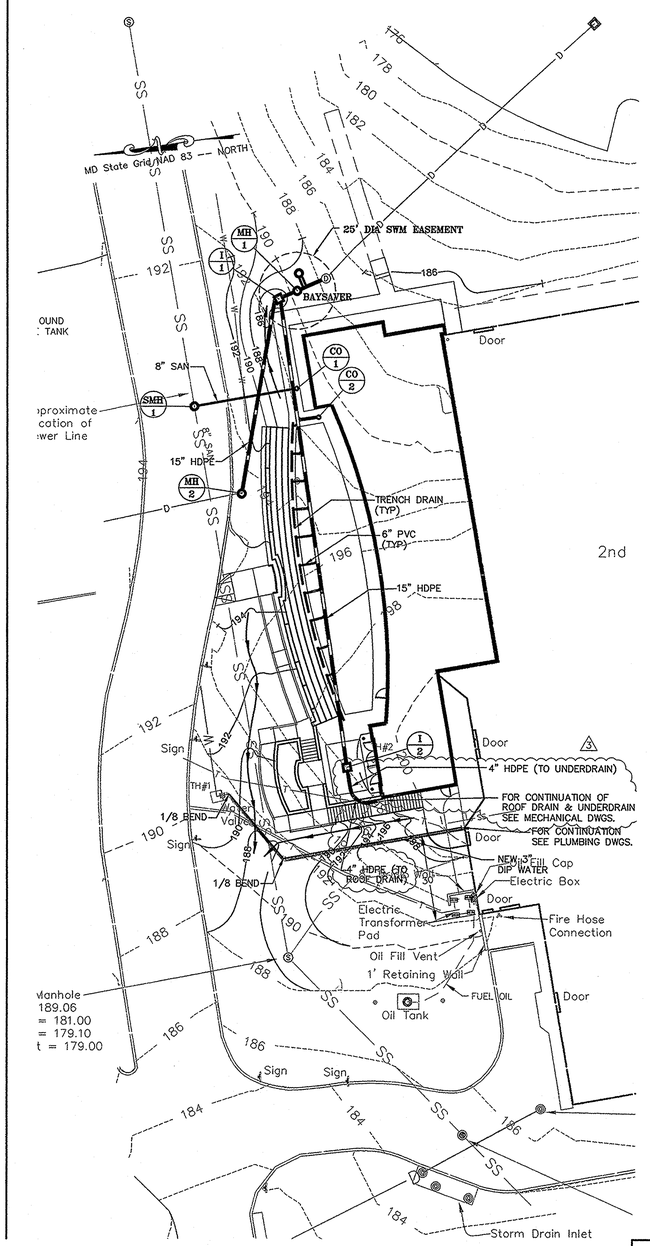

UTILITY PLAN
SCALE: 1" = 20'

GRAPHIC SCALE
20 0 10 20 40 60
(IN FEET)
1 inch = 20 ft.

STORM DRAINAGE STRUCTURE SCHEDULE

NO.	DESCRIPTION	COORDINATES NORTHING	EASTING
MH-1	NEW PRIMARY SEPARATION MANHOLE. SEE CHAS. CO. STD S/1.00	N. 5297.17	E. 5059.45
	NEW CONTAINMENT STORAGE MANHOLE. SEE CHAS. CO. STD S/1.01 BAYSAVER SYSTEM. SEE SHEET C-5.2		
I-1	NEW YARD INLET. SEE S.H.A. STD. DETAIL MD.381.01	N. 5295.28	E. 5053.04
I-2	NEW YARD INLET. NDS 24" BASIN WITH CAST IRON GRATE.	N. 5142.39	E. 5076.00
MH-2	NEW MANHOLE. SEE CHAS. CO. STD. S/1.00	N. 5231.21	E. 5041.27
CO-2	NEW CLEAN OUT. SEE DETAIL 5, SHEET C-5.1	N. 5258.12	E. 5066.56
	NEW TRENCH DRAINS ACO SYSTEM 4000 10 EA (CENTER ALONG LENGTH OF CURVED STEP)		

SANITARY STRUCTURE SCHEDULE

NO.	DESCRIPTION	COORDINATES NORTHING	EASTING
CO-1	NEW CLEAN OUT. SEE CHAS. CO. STD. S/4.03 & S/4.04	N.5256.44	E. 5059.33
SMH-2	NEW MANHOLE. SEE CHAS. CO. STD. S/1.10	N. 5231.21	E. 5041.27

NOTE TO CONTRATOR: SEE CHAS. CO. STD. B/1.00, M/2.02, M/2.03 & M/2.04

——— 4" water Line

CHARLES COUNTY GOVERNMENT

Department of Planning and Growth Management
Development Services Department

APPROVED FOR:	*signatures*	construction *date*	as-builts *date*	*initials*
FLOODPLAINS		/ /	/ /	
GRADING		/ /	/ /	
ROADS		/ /	/ /	
STORM DRAINAGE		/ /	/ /	
STORM WATER MANAGEMENT		/ /	/ /	
WATER & SEWER		/ /	/ /	
OTHER		/ /	/ /	

Conditions and/or Remarks:
This approval expires two years from the date of issuance. Request of extensions must be made in writing and received by the development services department before the expiration date.

EXPIRATION DATE / /

Rev. No.	CONSTRUCTION REVISION

ENGINEERS:
Consulting Engineers
6715 Whittier Avenue 3rd Floor (703) 288-9550
Mc Lean, Virginia 22101 (703) 288-9555 (FAX)
WHITNEY, BAILEY, COX & MAGNANI, LLP

PGM # VC 02-0028

DRAWING:

PROJECT RECORD DRAWINGS

Design: C.K./K.H./S.S.			
Draft: K.D./C.S.	DATE: 02/05/02	DWG #:	
Checked: C.K./J.K.	SCALE: 1"=20'		

1355 Beverly Road
Suite 105
McLean VA 22101
703.903.9100
703.903.9755 Fax

Grimm and Parker Architects

GRADING AND UTILITY PLAN
COLLEGE OF SOUTHERN MARYLAND WELLNESS CENTER
LA PLATA, MARYLAND

DATE	DESCRIPTION
4/03	ADD R.D. & U.D.

© GRIMM AND PARKER,P.C. 1999

C-2.2

04/30/03
BID SET

RECEIVED
OCT 25 2004

© GRIMM AND PARKER,P.C. 1999

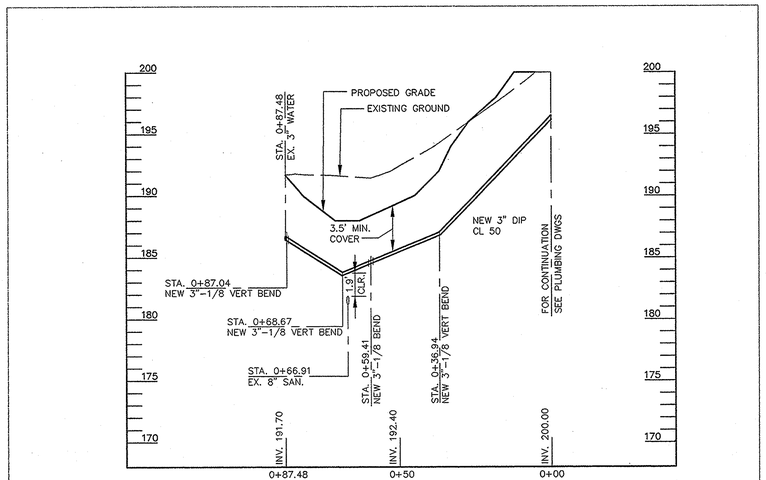

PROP 3" WATER FROM MAIN TO PROP. BLDG.

SCALE: HORIZ. 1"=20'
VERT. 1"=5'

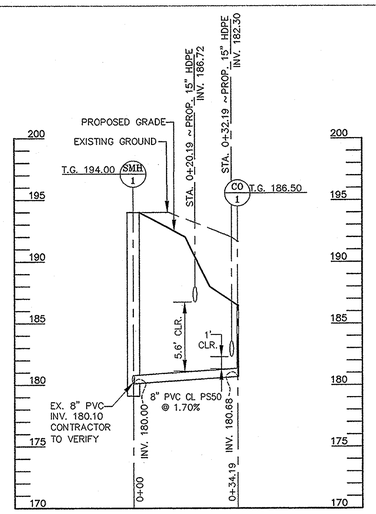

SANITARY PROFILE

SCALE: HORIZ. 1"=20'
VERT. 1"=5'

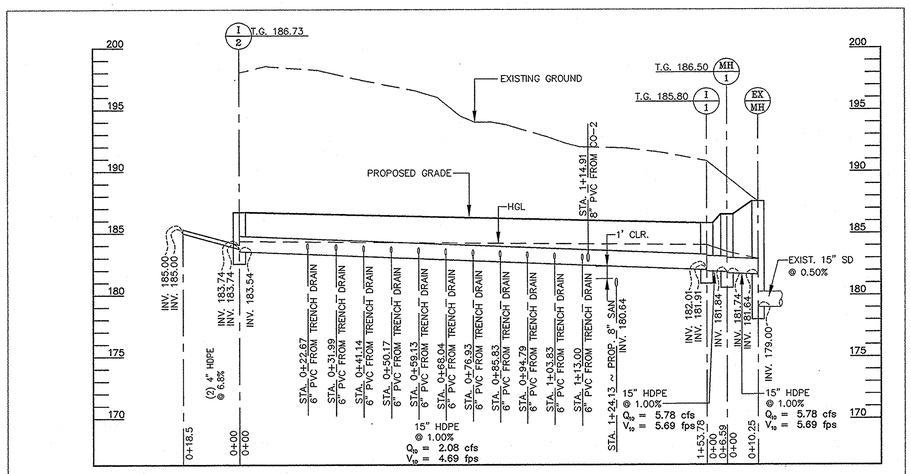

STORM DRAIN PROFILE

SCALE: HORIZ. 1"=20'
VERT. 1"=5'

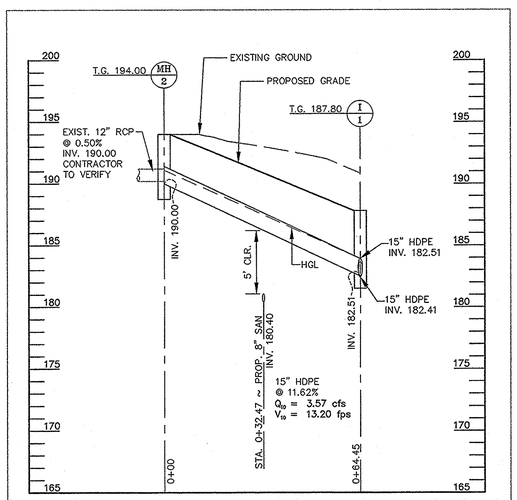

STORM DRAIN PROFILE

SCALE: HORIZ. 1"=20'
VERT. 1"=5'

CHARLES COUNTY GOVERNMENT

Department of Planning and Growth Management
Development Services Department

APPROVED FOR:	*signatures*	construction *date*	as-built *date*	as-built *initials*
FLOODPLAINS		/ /	/ /	
GRADING		/ /	/ /	
ROADS		/ /	/ /	
STORM DRAINAGE		/ /	/ /	
STORM WATER MANAGEMENT		/ /	/ /	
WATER & SEWER		/ /	/ /	
OTHER		/ /	/ /	

Conditions and/or Remarks:
This approval expires two years from the date of issuance. Request of extensions must be made in writing and received by the development services department before the expiration date.

EXPIRATION DATE / /

Rev. No.	CONSTRUCTION REVISION	

ENGINEERS:
Consulting Engineers
6715 Whittier Avenue 3rd Floor (703) 288-9550
Mc Lean, Virginia 22101 (703) 288-9555 (FAX)
WHITNEY, BAILEY, COX & MAGNANI, LLP

PGM # VC 02-0028

DRAWING:
PROJECT RECORD DRAWINGS

Design: C.K./K.H./S.S.			
Draft: K.D./C.S.	DATE: 02/05/02	DWG #:	
Checked: C.K./J.K.	SCALE:		

© GRIMM AND PARKER,P.C. 1999

C-2.3

RECEIVED
04/30/03
BID SET
MAY 5 2004
GRIMM AND PARKER, P.C.

Grimm and Parker Architects
1355 Beverly Road
Suite 105
McLean VA 22101
703.903.9100
703.903.9755 Fax

UTILITY PROFILES
COLLEGE OF SOUTHERN MARYLAND WELLNESS CENTER
LA PLATA, MARYLAND

DATE	DESCRIPTION

© GRIMM AND PARKER,P.C. 1999

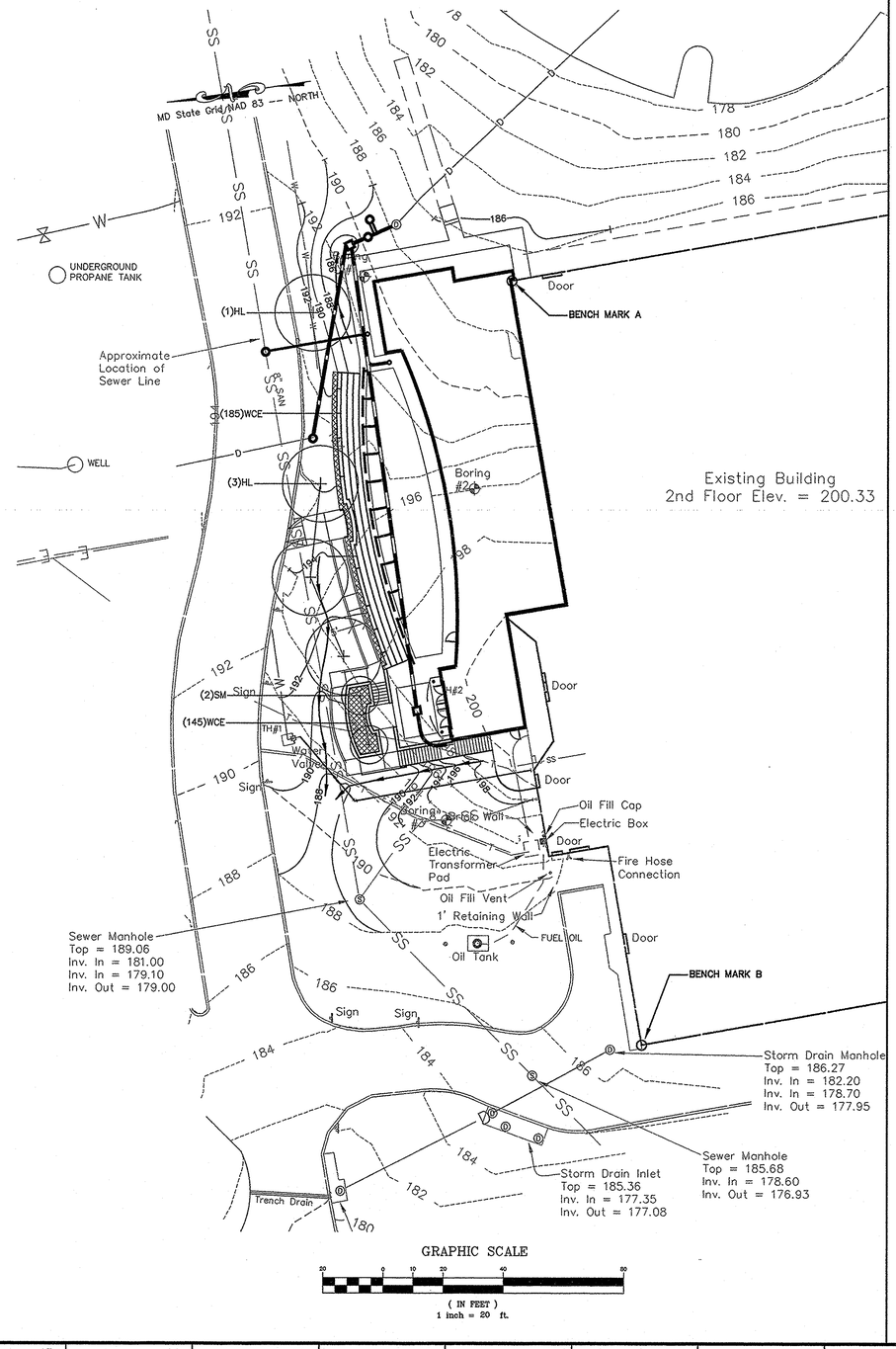

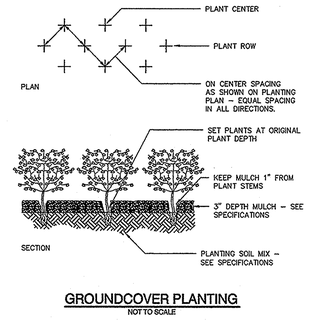

GROUNDCOVER PLANTING
NOT TO SCALE

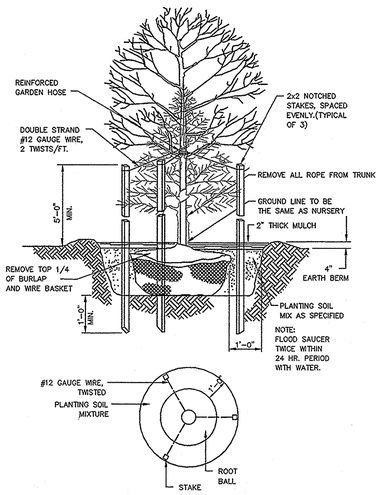

TREE PLANTING DETAIL
NOT TO SCALE

PLANT LIST

KEY	QUANTITY	COMMON NAME/BOTANICAL NAME	MIN. SIZE	ROOT	REMARKS
HL	4 EA.	SHADEMASTER HONEYLOCUST / GLEDITSIA TRICANTHOS INERMIS 'SHADEMASTER'	2" CAL.	B&B	–
SM	2 EA.	STAR MAGNOLIA / MAGNOLIA STELLATA	8' HGT.	B&B	–
WCE	330EA.	WINTERCREEPER EUONYMUS / EUONYMUS FORTUNEI 'COLORATA'	2" PP	CONT.	12" O.C.

CHARLES COUNTY GOVERNMENT

Department of Planning and Growth Management
Development Services Department

APPROVED FOR:	*signatures*	construction *date*	as-builts *date*	as-builts *initials*
FLOODPLAINS		/ /	/ /	
GRADING		/ /	/ /	
ROADS		/ /	/ /	
STORM DRAINAGE		/ /	/ /	
STORM WATER MANAGEMENT		/ /	/ /	
WATER & SEWER		/ /	/ /	
OTHER		/ /	/ /	

Conditions and/or Remarks:
This approval expires two years from the date of issuance. Request of extensions must be made in writing and received by the development services department before the expiration date.

EXPIRATION DATE / /

Rev. No.	CONSTRUCTION REVISION

ENGINEERS:
Consulting Engineers
6715 Whittier Avenue 3rd Floor (703) 288-9550
Mc Lean, Virginia 22101 (703) 288-9555 (FAX)
WHITNEY, BAILEY, COX & MAGNANI, LLP

PGM # VC 02-0028

DRAWING:
PROJECT RECORD DRAWINGS

Design: C.K./K.H./S.S.
Draft: K.D./C.S. DATE: 02/05/02 DWG #:
Checked: C.K./J.K. SCALE:

04/30/03 BID SET

Grimm and Parker Architects
1355 Beverly Road
Suite 105
McLean VA 22101
703.903.9100
703.903.9755 Fax

PLANTING PLAN
COLLEGE OF SOUTHERN MARYLAND WELLNESS CENTER
LA PLATA, MARYLAND

DATE	DESCRIPTION

© GRIMM AND PARKER,P.C. 1999

C-3.1

© GRIMM AND PARKER,P.C. 1999

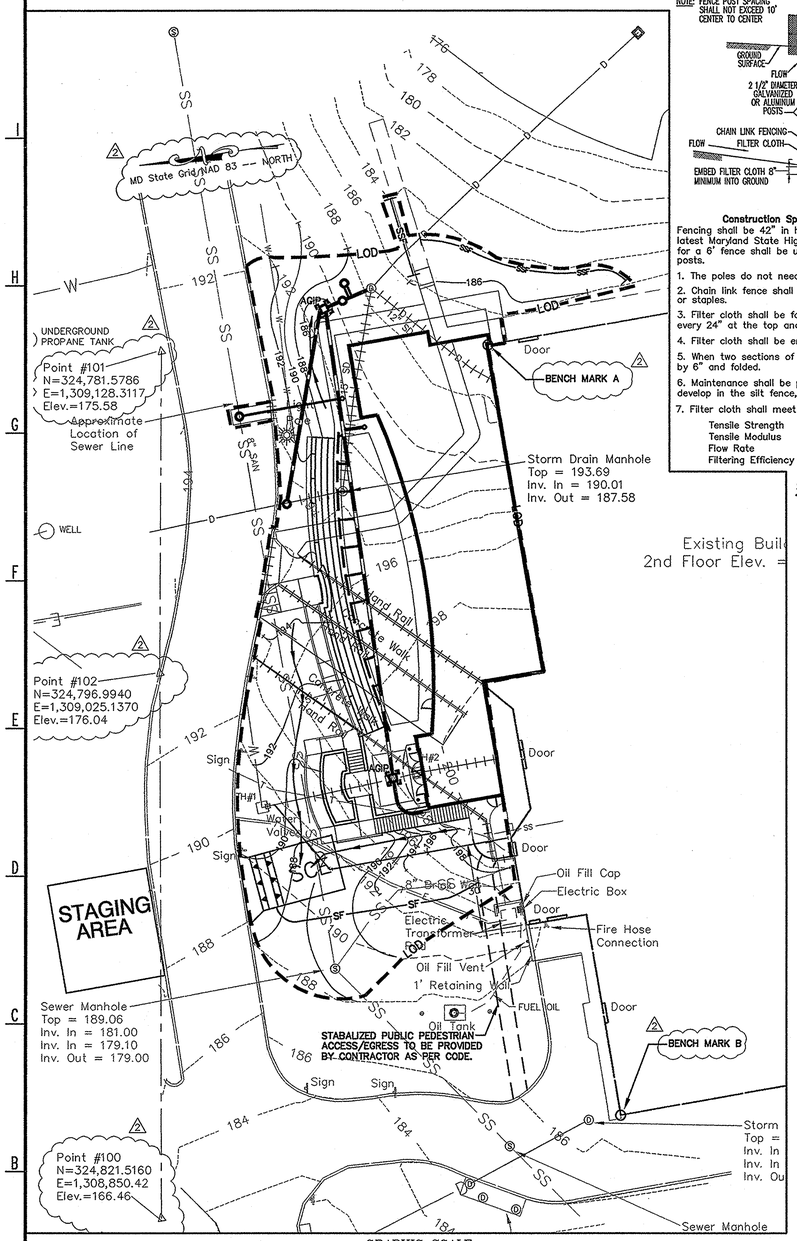

GRAPHIC SCALE

20 0 10 20 40 80

(IN FEET)
1 inch = 20 ft.

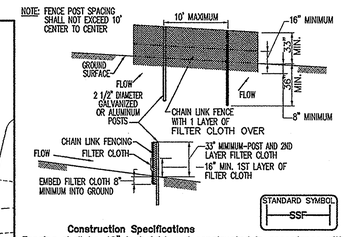

Construction Specifications

Fencing shall be 42" in height and constructed in accordance with the latest Maryland State Highway Details for Chain Link Fencing. The specification for a 6' fence shall be used, substituting 42" fabric and 6' length posts.

1. The poles do not need to be set in concrete.
2. Chain link fence shall be fastened securely to the fence posts with wire ties, or staples.
3. Filter cloth shall be fastened securely to the chain link fence with ties spaced every 24" at the top and mid section.
4. Filter cloth shall be embedded a minimum of 8" into the ground.
5. When two sections of filter cloth adjoin each other, they shall be overlapped by 6" and folded.
6. Maintenance shall be performed as needed and silt buildups removed when "bulges" develop in the silt fence, or when silt reaches 50% of fence height
7. Filter cloth shall meet the following requirements for Geotextile Class F:

Tensile Strength	50 lbs/in (min.)	Test: MSMT 509
Tensile Modulus	20 lbs/in (min.)	Test: MSMT 509
Flow Rate	0.3 gal/ft /minute (max.)	Test: MSMT 322
Filtering Efficiency	75% (min.)	Test: MSMT 322

SUPER SILT FENCE
NOT TO SCALE

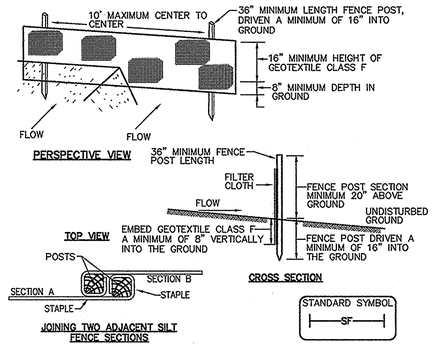

Construction Specifications

1. Fence posts shall be a minimum of 36" long driven 16" minimum into the ground. Wood posts shall be 11/2" x 11/2" square (minimum) cut, or 13/4" diameter (minimum) round and shall be of sound quality hardwood. Steel posts will be standard T or U section weighting not less than 1.00 pond per linear foot.
2. Geotextile shall be fastened securely to each fence post with wire ties or staples at top and mid-section and shall meet the following requirements for Geotextile Class F:

Tensile Strength	50 lbs/in (min.)	Test: MSMT 509
Tensile Modulus	20 lbs/in (min.)	Test: MSMT 509
Flow Rate	0.3 gal ft² / minute (max.)	Test: MSMT 322
Filtering Efficiency	75% (min.)	Test: MSMT 322

3. Where ends of geotextile fabric come together, they shall be overlapped, folded and stapled to prevent sediment bypass.
4. Silt Fence shall be inspected after each rainfall event and maintained when bulges occur or when sediment accumulation reached 50% of the fabric height.

SILT FENCE
NOT TO SCALE

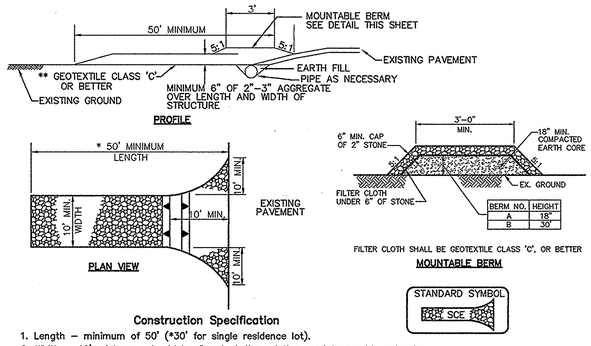

Construction Specification

1. Length – minimum of 50' (*30' for single residence lot).
2. Width – 10' minimum, should be flared at the existing road to provide a turning radius.
3. Geotextile fabric (filter cloth) shall be placed over the existing ground prior to placing stone. **The plan approval authority may not require single family residences to use geotextile.
4. Stone – crushed aggregate (2" to 3") or reclaimed or recycled concrete equivalent shall be placed at least 6" deep over the length and width of the entrance.
5. Surface Water – all surface water flowing to or diverted toward construction entrances shall be piped through the entrance, maintaining positive drainage. Pipe installed through the stabilized construction entrance shall be protected with a mountable berm with 5:1 slopes and a minimum of 6" of stone over the pipe. Pipe has to be sized according to the drainage. When the SCE is located at a high spot and has no drainage to convey a pipe will not be necessary. Pipe should be sized according to the amount of runoff to be conveyed. A 6" minimum will be required.
6. Location – A stabilized construction entrance shall be located at every point where construction traffic enters or leaves a construction site. Vehicles leaving the site must travel over the entire length of the stabilized construction entrance.

STABALIZED CONSTRUCTION ENTRANCE
NOT TO SCALE

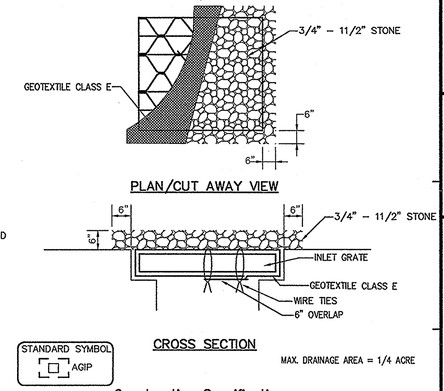

Construction Specifications

1. Lift grate and wrap with Geotextile Class E to completely cover all openings, then set grate back in place.
2. Place 3/4" to 11/2" stone, 4"–6" thick on the grate to secure the fabric and provide additional filtration.
3. This type of protection must be inspected frequently and the filter cloth and stone replaced when clogged with sediment.

AT-GRADE INLET PROTECTION
NOT TO SCALE

CHARLES COUNTY GOVERNMENT

Department of Planning and Growth Management
Development Services Department

APPROVED FOR:	*signatures*	construction *date*	as-builts *date*	as-builts *initials*
FLOODPLAINS		/ /	/ /	
GRADING		/ /	/ /	
ROADS		/ /	/ /	
STORM DRAINAGE		/ /	/ /	
STORM WATER MANAGEMENT		/ /	/ /	
WATER & SEWER		/ /	/ /	
OTHER		/ /	/ /	

Conditions and/or Remarks:
This approval expires two years from the date of issuance. Request of extensions must be made in writing and received by the development services department before the expiration date.

EXPIRATION DATE / /

Rev. No.	CONSTRUCTION REVISION

ENGINEERS:

Consulting Engineers
6715 Whittier Avenue 3rd Floor (703) 288-9550
Mc Lean, Virginia 22101 (703) 288-9555 (FAX)
WHITNEY, BAILEY, COX & MAGNANI, LLP

PGM # VC 02-0028

DRAWING:

PROJECT RECORD DRAWINGS

Design: C.K./K.H./S.S.			
Draft: K.D./C.S.	DATE: 02/05/02	DWG #:	
Checked: C.K./J.K.	SCALE:		

Grimm and Parker Architects
1355 Beverly Road
Suite 105
McLean VA 22101
703.903.9100
703.903.9755 Fax

EROSION & SEDIMENT CONTROL PLAN
COLLEGE OF SOUTHERN MARYLAND WELLNESS CENTER
LA PLATA, MARYLAND

DATE	DESCRIPTION

© GRIMM AND PARKER,P.C. 1999

C-4.1

04/30/03
BID SET

RECEIVED
OCT 25 2004

© GRIMM AND PARKER,P.C. 1999

STANDARD EROSION CONTROL NOTES

1. THE CONTRACTOR SHALL NOTIFY THE MARYLAND WATER MANAGEMENT ADMINISTRATION (WMA) AT (410) 631-3510 SEVEN (7) DAYS BEFORE COMMENCING ANY LAND DISTURBING ACTIVITY AND, UNLESS WAIVED BY THE ADMINISTRATION, SHALL BE REQUIRED TO HOLD A PRE-CONSTRUCTION MEETING BETWEEN PROJECT REPRESENTATIVES AND A REPRESENTATIVE OF WMA.

2. THE CONTRACTOR MUST NOTIFY WMA IN WRITING AND BY TELEPHONE AT THE FOLLOWING POINTS:
   - A. THE REQUIRED PRE-CONSTRUCTION MEETING.
   - B. FOLLOWING INSTALLATION OF SEDIMENT CONTROL MEASURES.
   - C. DURING THE INSTALLATION OF SEDIMENT BASINS (TO BE CONVERTED INTO PERMANENT STORMWATER MANAGEMENT STRUCTURES) AT THE REQUIRED INSPECTION POINTS (SEE INSPECTION CHECKLIST ON PLAN). NOTIFICATION PRIOR TO COMMENCING CONSTRUCTION OF EACH STEP IS MANDATORY.
   - D. PRIOR TO REMOVAL OR MODIFICATION OF ANY SEDIMENT CONTROL STRUCTURE(S).
   - E. PRIOR TO REMOVAL OF ALL SEDIMENT CONTROL DEVICES.
   - F. PRIOR TO FINAL ACCEPTANCE.

3. THE CONTRACTOR SHALL CONSTRUCT ALL EROSION AND SEDIMENT CONTROL MEASURES PER THE APPROVED PLAN AND CONSTRUCTION SEQUENCE AND SHALL HAVE THEM INSPECTED AND APPROVED BY THE AGENCY INSPECTOR OR WMA INSPECTOR PRIOR TO BEGINNING ANY OTHER LAND DISTURBANCES. MINOR SEDIMENT CONTROL DEVICE LOCATION ADJUSTMENTS MAY BE MADE IN THE FIELD WITH THE APPROVAL OF THE WMA INSPECTOR. THE CONTRACTOR SHALL ENSURE THAT ALL RUNOFF FROM DISTURBED AREAS IS DIRECTED TO THE SEDIMENT CONTROL DEVICES, AND SHALL NOT REMOVE ANY EROSION OR SEDIMENT CONTROL MEASURE WITHOUT PRIOR PERMISSION FROM WMA INSPECTOR AND AGENCY INSPECTOR. THE CONTRACTOR MUST OBTAIN PRIOR AGENCY AND WMA APPROVAL FOR CHANGES TO THE SEDIMENT CONTROL PLAN AND/OR SEQUENCE OF CONSTRUCTION.

4. THE CONTRACTOR SHALL PROTECT ALL POINTS OF CONSTRUCTION INGRESS AND EGRESS TO PREVENT THE DEPOSITION OF MATERIALS ONTO PUBLIC ROADS. ALL MATERIALS DEPOSITED ONTO PUBLIC ROADS SHALL BE REMOVED IMMEDIATELY.

5. THE CONTRACTOR SHALL INSPECT DAILY AND MAINTAIN CONTINUOUSLY IN AN EFFECTIVE OPERATING CONDITION ALL EROSION AND SEDIMENT CONTROL MEASURES UNTIL SUCH TIMES AS THEY ARE REMOVED WITH PRIOR PERMISSION FROM WMA INSPECTOR AND AGENCY INSPECTOR.

6. ALL SEDIMENT BASINS, TRAP EMBANKMENTS AND SLOPES, PERIMETER DIKES, SWALES, AND ALL DISTURBED SLOPES STEEPER OR EQUAL TO 3:1 SHALL BE STABILIZED WITH SOD OR SEED AND ANCHORED STRAW MULCH OR OTHER APPROVED STABILIZATION MEASURES AS SOON AS POSSIBLE BUT NO LATER THAN SEVEN (7) CALENDAR DAYS AFTER ESTABLISHMENT. ALL AREAS DISTURBED OUTSIDE OF THE PERIMETER SEDIMENT CONTROL SYSTEM MUST BE MINIMIZED. MAINTENANCE MUST BE PERFORMED AS NECESSARY TO ENSURE CONTINUED STABILIZATION. (REQUIREMENT FOR STABILIZATION MAY BE REDUCED TO THREE (3) DAYS FOR SENSITIVE AREAS.)

7. THE CONTRACTOR SHALL APPLY SOD OR SEED AND ANCHORED STRAW MULCH OR OTHER APPROVED STABILIZATION MEASURES TO ALL DISTURBED AREAS AND STOCKPILES WITHIN FOURTEEN (14) CALENDAR DAYS AFTER STRIPPING AND GRADING ACTIVITIES HAVE CEASED IN THE AREA. MAINTENANCE SHALL BE PERFORMED AS NECESSARY TO ENSURE CONTINUED STABILIZATION. (REQUIREMENT MAY BE REDUCED TO SEVEN (7) DAYS FOR SENSITIVE AREAS.)

8. PRIOR TO REMOVAL OF SEDIMENT CONTROL MEASURES, THE CONTRACTOR SHALL STABILIZE AND HAVE ESTABLISHED PERMANENT STABILIZATION FOR ALL CONTRIBUTORY DISTURBED AREAS USING SOD OR AN APPROVED PERMANENT SEED MIXTURE WITH REQUIRED SOIL AMENDMENTS AND AN APPROVED ANCHORED MULCH. WOOD FIBER MULCH MAY ONLY BE USED IN SEEDING SEASON WHERE THE SLOPE DOES NOT EXCEED 10% AND GRADING HAS BEEN DONE TO PROMOTE SHEET FLOW DRAINAGE. AREAS BROUGHT TO FINISHED GRADE DURING THE SEEDING SEASON SHALL BE PERMANENTLY STABILIZED AS SOON AS POSSIBLE, BUT NO LATER THAN FOURTEEN (14) CALENDAR DAYS AFTER ESTABLISHMENT. WHEN PROPERTY IS BROUGHT TO FINISHED GRADE DURING THE MONTHS OF NOVEMBER THROUGH FEBRUARY, AND PERMANENT STABILIZATION IS FOUND TO BE IMPRACTICAL, TEMPORARY SEED AND ANCHORED STRAW MULCH SHALL BE APPLIED TO THE DISTURBED AREAS. THE FINAL PERMANENT STABILIZATION OF SUCH PROPERTY SHALL BE APPLIED BY MARCH 15 OR EARLIER IF GROUND AND WEATHER CONDITIONS ALLOW.

9. THE SITE'S APPROVAL LETTER, APPROVED EROSION AND SEDIMENT CONTROL PLANS, DAILY LOG BOOKS AND TEST REPORTS SHALL BE AVAILABLE AT THE SITE FOR INSPECTION BY DULY AUTHORIZED OFFICIALS OF WMA AND AGENCY RESPONSIBLE FOR PROJECT.

10. SURFACE DRAINAGE FLOWS OVER UNSTABILIZED CUT AND FILL SLOPES SHALL BE CONTROLLED BY EITHER PREVENTING DRAINAGE FLOWS FROM TRAVERSING THE SLOPES OR BY INSTALLING PROTECTIVE DEVICES TO LOWER THE WATER DOWNSLOPE WITHOUT CAUSING EROSION. DIKES SHALL BE INSTALLED AND MAINTAINED AT THE TOP OF CUT OR FILL SLOPES UNTIL THE SLOPE AND DRAINAGE AREA TO IT ARE FULLY STABILIZED, AT WHICH TIME THEY MUST BE REMOVED AND FINAL GRADING DONE TO PROMOTE SHEET FLOW DRAINAGE. PROTECTIVE METHODS MUST BE PROVIDED AT POINTS OF CONCENTRATED FLOW WHERE EROSION IS LIKELY TO OCCUR.

11. PERMANENT SWALES OR OTHER POINTS OF CONCENTRATED WATER FLOW SHALL BE STABILIZED WITH SOD OR SEED WITH AN APPROVED EROSION CONTROL MATTING, RIPRAP OR BY OTHER APPROVED STABILIZATION MEASURES.

12. TEMPORARY SEDIMENT CONTROL DEVICES MAY BE REMOVED, WITH PERMISSION OF WMA INSPECTOR AND AGENCY INSPECTORS, WITHIN THIRTY (30) CALENDAR DAYS FOLLOWING ESTABLISHMENT OF PERMANENT STABILIZATION IN ALL CONTRIBUTORY DRAINAGE AREAS. STORMWATER MANAGEMENT STRUCTURES USED TEMPORARILY FOR SEDIMENT CONTROL SHALL BE CONVERTED TO THE PERMANENT CONFIGURATION WITHIN THIS TIME PERIOD AS WELL.

13. NO PERMANENT CUT OR FILL SLOPE WITH A GRADIENT STEEPER THAN 3:1 WILL BE PERMITTED IN THE LAWN MAINTENANCE AREAS. A SLOPE GRADIENT OF UP TO 2:1 WILL BE PERMITTED IN NON-MAINTENANCE AREAS PROVIDED THAT THOSE AREAS ARE INDICATED ON THE EROSION AND SEDIMENT CONTROL PLAN WITH A LOW-MAINTENANCE GROUND COVER SPECIFIED FOR PERMANENT STABILIZATION. SLOPE GRADIENT STEEPER THAN 2:1 WILL NOT BE PERMITTED WITH VEGETATIVE STABILIZATION.

14. FOR FINISHED GRADING, THE CONTRACTOR SHALL PROVIDE ADEQUATE GRADIENTS SO AS TO: PREVENT WATER FROM STANDING ON THE SURFACE MORE THAN TWENTY-FOUR (24) HOURS AFTER THE END OF A RAINFALL EXCEPT IN DESIGNATED DRAINAGE COURSES AND SWALE FLOW AREAS WHICH MAY DRAIN AS LONG AS FORTY-EIGHT (48) HOURS AFTER THE END OF A RAINFALL, AREAS DESIGNED TO HAVE STANDING WATER SHALL NOT BE REQUIRED TO MEET THIS REQUIREMENT.

15. SEDIMENT TRAPS OR BASINS ARE NOT PERMITTED WITHIN TWENTY (20) FEET OF A FOUNDATION WHICH IS EXISTING OR UNDER CONSTRUCTION. NO STRUCTURE MAY BE CONSTRUCTED WITHIN TWENTY (20) FEET OF AN ACTIVE SEDIMENT TRAP OR BASIN.

16. THE WMA INSPECTOR HAS THE OPTION OF REQUIRING ADDITIONAL SAFETY OR SEDIMENT CONTROL MEASURES, IF DEEMED NECESSARY.

17. ALL TRAP DEPTH DIMENSIONS ARE RELATIVE TO THE OUTLET ELEVATION. ALL TRAPS MUST HAVE A STABLE OUTFALL. ALL TRAPS AND BASINS SHALL HAVE STABLE INFLOW POINTS.

18. VEGETATIVE STABILIZATION SHALL BE PERFORMED IN ACCORDANCE WITH THE STANDARDS AND SPECIFICATIONS FOR SOIL EROSION AND SEDIMENT CONTROL. REFER TO APPROPRIATE SPECIFICATIONS FOR TEMPORARY SEEDING, PERMANENT SEEDING, MULCHING, SODDING AND GROUND COVERS.

19. TEMPORARY SEDIMENT TRAP(S) SHALL BE CLEANED OUT AND RESTORED TO THE ORIGINAL DIMENSIONS WHEN SEDIMENT HAS ACCUMULATED TO A POINT ONE HALF (1/2) THE DEPTH BETWEEN THE OUTLET CREST AND THE BOTTOM OF THE TRAP. SEDIMENT BASINS SHALL BE CLEANED OUT AND RESTORED TO THE ORIGINAL DIMENSIONS WHEN SEDIMENT HAS ACCUMULATED TO ONE HALF (1/2) THE DEPTH BETWEEN THE DEWATERING ELEVATION AND THE BOTTOM OF THE BASIN.

20. SEDIMENT REMOVED FROM TRAPS (AND BASINS) SHALL BE PLACED AND STABILIZED IN APPROVED AREAS, BUT NOT WITHIN A FLOODPLAIN, WETLAND OR TREE-SAVE AREA. WHEN PUMPING SEDIMENT LADEN WATER, THE DISCHARGE MUST BE DIRECTED TO A SEDIMENT TRAPPING DEVICE PRIOR TO RELEASE FROM THE SITE. A SUMP PIT MAY BE USED IF SEDIMENT TRAPS THEMSELVES ARE BEING PUMPED OUT.

21. WHERE DEEMED APPROPRIATE BY THE ENGINEER OR INSPECTOR, SEDIMENT BASINS AND TRAPS MAY NEED TO BE SURROUNDED WITH AN APPROVED SAFETY FENCE. THE FENCE MUST CONFORM TO LOCAL ORDINANCES AND REGULATIONS. THE DEVELOPER OR OWNER SHALL CHECK WITH LOCAL BUILDING OFFICIALS ON APPLICABLE SAFETY REQUIREMENTS. WHERE SAFETY FENCE IS DEEMED APPROPRIATE AND LOCAL ORDINANCES DO NOT SPECIFY FENCING SIZES AND TYPES, THE FOLLOWING SHALL BE USED AS A MINIMUM STANDARD: THE SAFETY FENCE MUST BE MADE OF WELDED WIRE AND AT LEAST 42 INCHES HIGH, HAVE POSTS SPACED NO FARTHER APART THAN 8 FEET, HAVE MESH OPENINGS NO GREATER THAN 2 INCHES IN WIDTH AND 4 INCHES IN HEIGHT WITH A MINIMUM OF 14 GAUGE WIRE. THE SAFETY FENCE MUST BE MAINTAINED AND IN GOOD CONDITION AT ALL TIMES.

22. SEDIMENT CONTROL FOR UTILITY CONSTRUCTION FOR AREAS OUTSIDE OF DESIGNED CONTROLS OR AS DIRECTED BY ENGINEER OR WMA INSPECTOR:
   - A. CALL "MISS UTILITY" AT 1-800-257-7777 48 HOURS PRIOR TO THE START OF WORK.
   - B. EXCAVATED TRENCH MATERIAL SHALL BE PLACED ON THE HIGH SIDE OF THE TRENCH.
   - C. TRENCHES FOR UTILITY INSTALLATION SHALL BE BACKFILLED, COMPACTED AND STABILIZED AT THE END OF EACH WORKING DAY. NO MORE TRENCH SHALL BE OPENED THAN CAN BE COMPLETED THE SAME DAY, UNLESS;
   - D. TEMPORARY SILT FENCE SHALL BE PLACED IMMEDIATELY DOWNSTREAM OF ANY DISTURBED AREA INTENDED TO REMAIN DISTURBED FOR MORE THAN ONE DAY.

23. OFF-SITE SOIL OR BORROW AREAS ON STATE OR FEDERAL PROPERTY MUST HAVE PRIOR APPROVAL BY WMA AND OTHER APPLICABLE STATE, FEDERAL AND LOCAL AGENCIES; OTHERWISE, APPROVAL MUST BE GRANTED BY THE LOCAL AUTHORITIES. ALL WASTE AND BORROW AREAS OFF-SITE MUST BE PROTECTED BY SEDIMENT CONTROL MEASURES AND STABILIZED.

24. AT SITES WHERE INFILTRATION DEVICES ARE USED FOR THE CONTROL OF STORMWATER, EXTREME CARE MUST BE TAKEN TO PREVENT RUNOFF FROM UNSTABILIZED AREAS FROM ENTERING THE STRUCTURE DURING CONSTRUCTION. SEDIMENT CONTROL DEVICES PLACED IN INFILTRATION AREAS MUST HAVE BOTTOM ELEVATIONS AT LEAST TWO (2) FEET HIGHER THAN THE FINISH GRADE BOTTOM ELEVATION OF THE INFILTRATION PRACTICE. WHEN CONVERTING A SEDIMENT TRAP TO AN INFILTRATION DEVICE, ALL ACCUMULATED SEDIMENT MUST BE REMOVED AND DISPOSED OF PRIOR TO FINAL GRADING OF INFILTRATION DEVICE.

25. WHEN A STORM DRAIN SYSTEM OUTFALL IS DIRECTED TO A SEDIMENT TRAP OR SEDIMENT BASIN AND THE SYSTEM IS TO BE USED FOR TEMPORARILY CONVEYING SEDIMENT LADEN WATER, ALL STORM DRAIN INLETS IN NON-SUMP AREAS SHALL HAVE TEMPORARY ASPHALT BERMS CONSTRUCTED AT THE TIME OF BASE PAVING TO DIRECT GUTTER FLOW INTO THE INLETS TO AVOID SURCHARGING AND OVERFLOW OF INLETS IN SUMP AREAS.

26. SITE INFORMATION:

TOTAL AREA OF SITE	0.75	ACRES
AREA DISTURBED	0.45	ACRES
AREA TO BE ROOFED OR PAVED	0.00	ACRES
TOTAL CUT	0000	CU. YDS.
TOTAL FILL	0000	CU. YDS.
OFF-SITE WASTE/BORROW AREA LOCATION	N/A	

* NOTE: CUT AND FILL CALCULATIONS LISTED ABOVE ARE FOR SEDIMENT AND EROSION CONTROL PURPOSES ONLY. CONTRACTOR SHALL CALCULATE HIS/HER OWN ESTIMATE AMOUNTS OF EARTHWORK QUANTITIES.

STANDARD STABILIZATION NOTE:

"FOLLOWING INITIAL SOIL DISTURBANCE OR REDISTURBANCE, PERMANENT OR TEMPORARY STABILIZATION SHALL BE COMPLETED WITHIN SEVEN (7) CALENDAR DAYS AS TO THE SURFACE OF ALL PERIMETER CONTROLS, DIKES, SWALES, DITCHES, PERIMETER SLOPES, AND ALL SLOPES GREATER THAN 3 HORIZONTAL TO 1 VERTICAL (3:1); AND FOURTEEN DAYS (14) AS TO ALL OTHER DISTURBED OR GRADED AREAS ON THE PROJECT SITE."

DESIGN CERTIFICATION:

"I HEREBY CERTIFY THAT THIS PLAN HAS BEEN DESIGNED IN ACCORDANCE WITH THE 1994 STANDARDS AND SPECIFICATIONS FOR SOIL EROSION AND SEDIMENT CONTROL OR CURRENT REVISIONS THEREOF, AND DEPARTMENT OF THE ENVIRONMENT STORMWATER MANAGEMENT REGULATIONS.

DATE _____ DESIGNER'S SIGNATURE

16897 JOHN KNIGHT

MD. REGISTRATION NO. PRINTED NAME

(P.E.) R.L.S. OR R.L.A. (CIRCLE)

OWNER'S/DEVELOPER'S CERTIFICATION:

"I/WE HEREBY CERTIFY THAT ALL CLEARING, GRADING, CONSTRUCTION AND/OR DEVELOPMENT WILL BE DONE PURSUANT TO THIS PLAN AND THAT ANY RESPONSIBLE PERSONNEL INVOLVED IN THE CONSTRUCTION PROJECT WILL HAVE A CERTIFICATE OF ATTENDANCE AT A MARYLAND DEPARTMENT OF THE ENVIRONMENT APPROVED TRAINING PROGRAM FOR THE CONTROL OF SEDIMENT AND EROSION BEFORE BEGINNING THE PROJECT. I HEREBY AUTHORIZE THE RIGHT OF ENTRY FOR PERIODIC ON-SITE EVALUATION BY THE STATE OF MARYLAND, DEPARTMENT OF THE ENVIRONMENT, COMPLIANCE INSPECTORS."

OWNER/DEVELOPER SIGNATURE DATE

PRINTED NAME AND TITLE CARD NO.

CHARLES COUNTY GOVERNMENT

Department of Planning and Growth Management

Development Services Department

APPROVED FOR:	signatures	construction date	as-builts date	as-builts initials
FLOODPLAINS		/ /	/ /	
GRADING		/ /	/ /	
ROADS		/ /	/ /	
STORM DRAINAGE		/ /	/ /	
STORM WATER MANAGEMENT		/ /	/ /	
WATER & SEWER		/ /	/ /	
OTHER		/ /	/ /	

Conditions and/or Remarks:

This approval expires two years from the date of issuance. Request of extensions must be made in writing and received by the development services department before the expiration date.

EXPIRATION DATE / /

Rev. No.	CONSTRUCTION REVISION

ENGINEERS:

Consulting Engineers
6715 Whittier Avenue 3rd Floor (703) 288-9550
Mc Lean, Virginia 22101 (703) 288-9555 (FAX)
WHITNEY, BAILEY, COX & MAGNANI, LLP

PGM # VC 02-0028

DRAWING:

PROJECT RECORD DRAWINGS

Design: C.K./K.H./S.S.			
Draft: K.D./C.S.	DATE: 02/05/02	DWG #:	
Checked: C.K./J.K.	SCALE: AS SHOWN		

Grimm and Parker Architects
1355 Beverly Road
Suite 105
McLean VA 22101
703.903.9100
703.903.9755 Fax

SEDCON NOTES

COLLEGE OF SOUTHERN MARYLAND WELLNESS CENTER
LA PLATA, MARYLAND

DATE	DESCRIPTION
4/30/02	BID SET

© GRIMM AND PARKER,P.C. 1999

C-4.2

04/11/02 W
BID SET

OCT 25 2004

SDE ASSOC.

© GRIMM AND PARKER,P.C. 1999

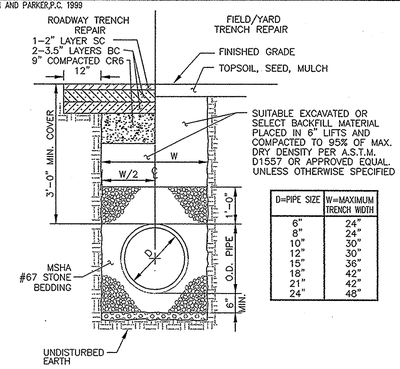

D=PIPE SIZE	W=MAXIMUM TRENCH WIDTH
6"	24"
8"	24"
10"	30"
12"	30"
15"	36"
18"	42"
21"	42"
24"	48"

NOTE: THIS DETAIL APPLIES TO ALL PVC & HDPE UTILITY TRENCHING

1 TRENCH REPAIR NOT TO SCALE

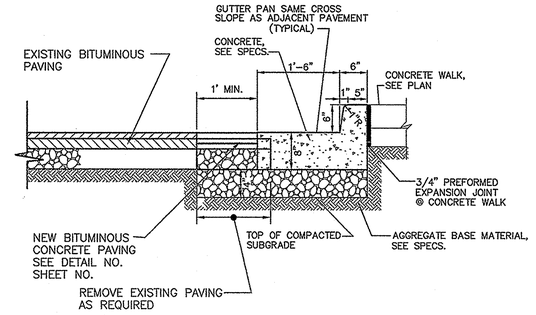

2 6" CONCRETE CURB ADJUSTMENT NOT TO SCALE

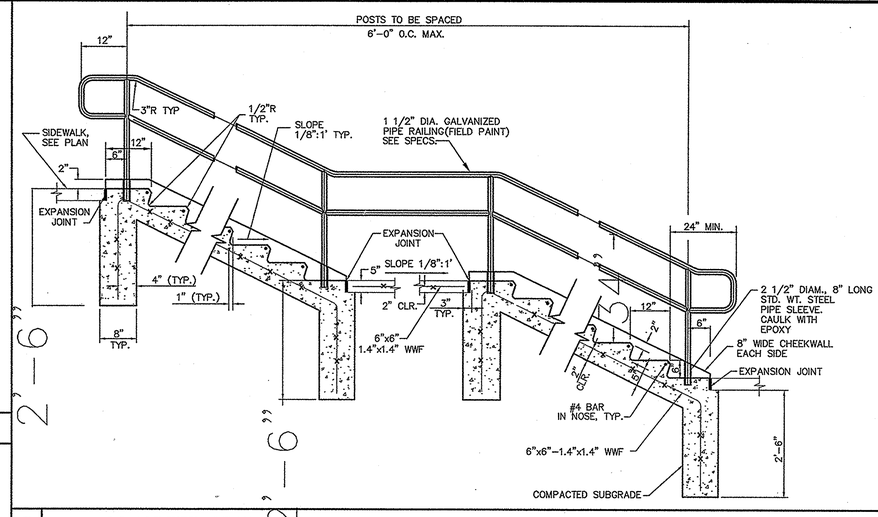

3 CONCRETE STEPS WITH HANDRAIL NOT TO SCALE

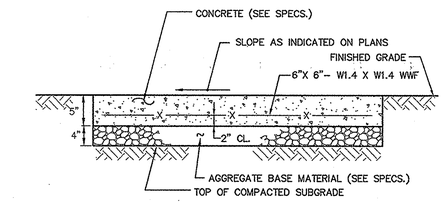

NOTES:

1. 1/2" PREMOLDED EXPANSION JOINT MATERIAL TO BE PLACED WHERE WALKS ABUTT CURBS, STEPS, BUILDINGS, OTHER WALKS, ETC. AND AT A MAXIMUM OF 20' INTERVALS ALONG THE WALK.
2. SCORING SHALL BE PROVIDED AT 4' ON CENTER FOR 4' & 8' WALKS, 5' ON CENTER FOR 5' & 10' WALKS, AND 6' ON CENTER FOR 6' AND LARGER NOT PREVIOUSLY MENTIONED.

4 CONCRETE WALK NOT TO SCALE

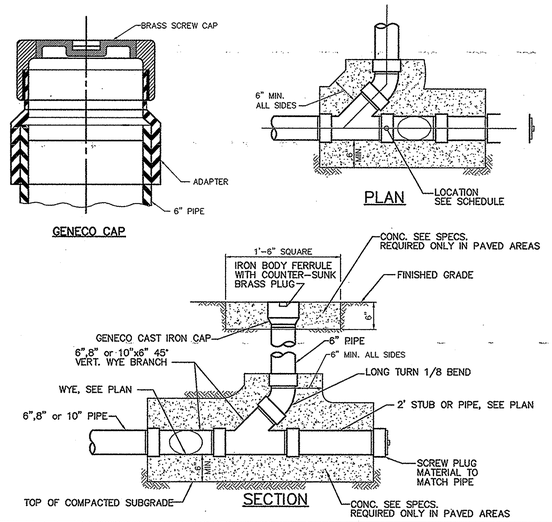

5 TYPICAL CLEAN OUT NOT TO SCALE

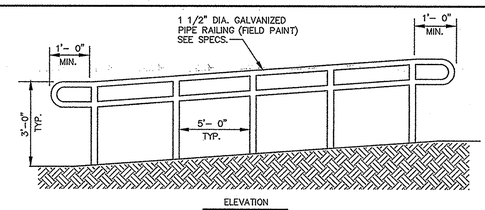

6 HANDRAIL DETAIL NOT TO SCALE

NOTE: ALL RAMP SURFACES SHALL BE 5" CONCRETE NON SKID TYPE SURFACES

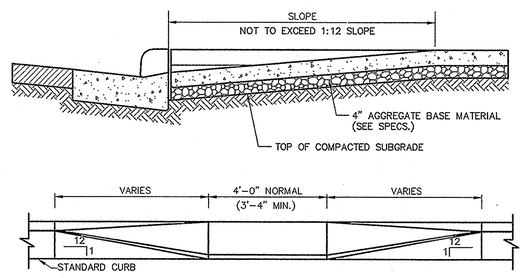

7 PEDESTRIAN RAMP NOT TO SCALE

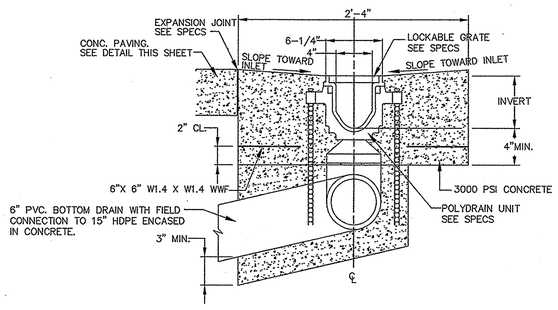

8 POLYDRAIN, TYPICAL CROSS SECTION NOT TO SCALE

CHARLES COUNTY GOVERNMENT

Department of Planning and Growth Management

Development Services Department

APPROVED FOR:	*signatures*	construction *date*	as-builts *date*	as-builts *initials*
FLOODPLAINS	☐	/ /	/ /	
GRADING	☐	/ /	/ /	
ROADS	☐	/ /	/ /	
STORM DRAINAGE	☐	/ /	/ /	
STORM WATER MANAGEMENT	☐	/ /	/ /	
WATER & SEWER	☐	/ /	/ /	
OTHER	☐	/ /	/ /	

Conditions and/or Remarks:

This approval expires two years from the date of issuance. Request of extensions must be made in writing and received by the development services department before the expiration date.

EXPIRATION DATE / /

Rev. No.	CONSTRUCTION REVISION	
☐		
☐		
☐		
☐		
☐		

ENGINEERS:
Consulting Engineers
6715 Whittier Avenue 3rd Floor (703) 288-9550
Mc Lean, Virginia 22101 (703) 288-9555 (FAX)
WHITNEY, BAILEY, COX & MAGNANI, LLP

PGM # VC 02-0028

DRAWING:

PROJECT RECORD DRAWINGS

Design: C.K./K.H./S.S.			
Draft: K.D./C.S.	DATE: 02/05/02	DWG #:	
Checked: C.K./J.K.	SCALE:		

Grimm and Parker Architects
1355 Beverly Road
Suite 105
McLean VA 22101
703.903.9100
703.903.9755 Fax

SITE DETAILS
COLLEGE OF SOUTHERN MARYLAND WELLNESS CENTER
LA PLATA, MARYLAND

DATE	DESCRIPTION
4/26/03	BID SET

© GRIMM AND PARKER,P.C. 1999

OCT 04/10/02
BID SET

© GRIMM AND PARKER,P.C. 1999

REVISIONS				
REV	DESCRIPTION	BY	DATE	APPROVED
1	MODIFIED DIMENSIONS, BACKFILL MATERIALS, AND NOTES	ELT	4/19/00	TEP

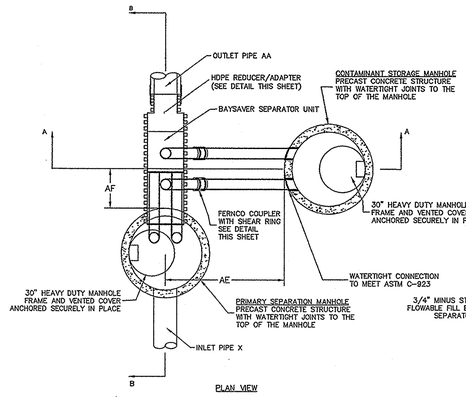

PLAN VIEW

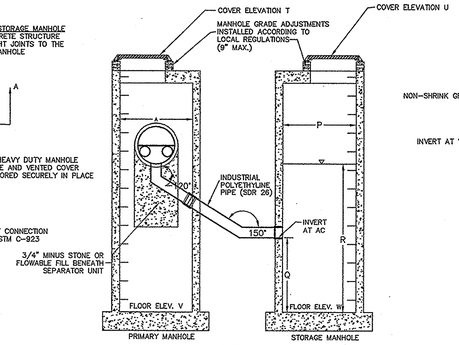

PRIMARY MANHOLE — STORAGE MANHOLE

SECTION AA

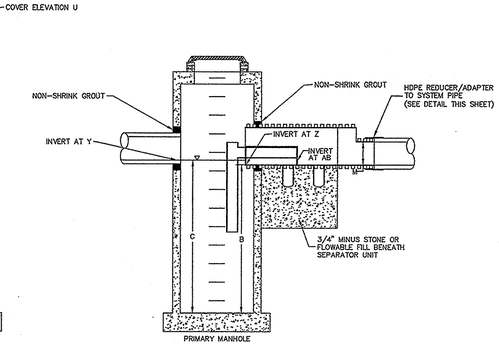

PRIMARY MANHOLE

SECTION BB

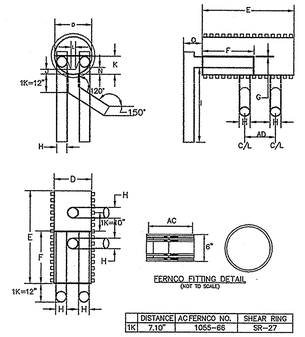

	DISTANCE AC	FERNCO NO.	SHEAR RING
1K	7.10"	1056-66	SR-27

BAYSAVER® INC. - Ph: 301-829-6470 Fax: 301-829-3747
1010 DEER HOLLOW DRIVE, MOUNT AIRY, MD 21771
THE BAYSAVER SEPARATION SYSTEM IS PROTECTED BY U.S. PATENT #5746911

HDPE-HDPE REDUCER DETAIL

FOR USE WITH HDPE/RCP OUTLET PIPES
NOT TO SCALE

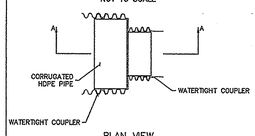

PLAN VIEW

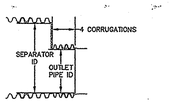

SECTION AA

Baysaver Separator Unit	Baysaver Manhole Sizes (prim. x stor.)	Maximum Treatment (cfs)*1	Maximum Treatment (gpm)*1	Impervious Area (acres)
1K Baysaver Separator	48x60	2.4	1076	1.4

BAYSAVER MAINTENANCE

BAYSAVER SYSTEMS MUST BE INSPECTED AND MAINTAINED PERIODICALLY. INSPECTION IS MADE BY CHECKING THE DEPTH OF SEDIMENT IN EACH MANHOLE WITH A GRADE STICK OR SIMILAR DEVICE. MAINTENANCE IS REQUIRED WHEN THE SEDIMENT DEPTH IN EITHER MANHOLE EXCEEDS 2 FEET. MINIMUM INSPECTION IS REQUIRED TWICE A YEAR TO MAINTAIN OPERATION AND FUNCTION OF BAYSAVER.

MAINTENANCE CONSISTS OF THE FOLLOWING:

A. CONTAMINANT STORAGE MANHOLE

1. REMOVE THE ENTIRE VOLUME OF THE CONTAMINATED WATER BY VACUUM TRUCK.

2. CLEAN THE MANHOLE WALLS AND FLUSH OUT THE MANHOLE USING A HIGH PRESSURE HOSE AND REMOVE FLUSHING WATER BY VACUUM TRUCK. MAKE CERTAIN MANHOLE IS CLEAN.

B. PRIMARY SEPARATION MANHOLE

1. USING A SUBMERSIBLE PUMP, PUMP THE CLEAN WATER FROM THE CENTER OF THE MANHOLE DIRECTLY INTO THE EMPTY STORAGE MANHOLE UNTIL THE WATER LEVEL FALLS TO 1 FOOT ABOVE THE SEDIMENT LAYER.

2. REMOVE THE SETTLED SEDIMENT AND REMAINING WATER BY VACUUM TRUCK.

3. CLEAN THE MANHOLE WALLS AND FLUSH OUT THE MANHOLE USING A HIGH PRESSURE HOSE AND REMOVE FLUSHING WATER BY VACUUM TRUCK. MAKE CERTAIN MANHOLE IS CLEAN.

4. CONTAMINATED MATERIAL REMOVED FROM THE MANHOLES MUST BE DISPOSED OF RESPONSIBLY AND LEGALLY BY THE OPERATOR OF THE VACUUM TRUCK.

BAYSAVER INSTALLATION INSTRUCTIONS

1. CALL UTILITY LOCATOR TO MAKE CERTAIN IT IS SAFE TO EXCAVATE.

2. STAKE OUT THE LOCATION OF THE PRIMARY AND STORAGE STRUCTURES AND EXCAVATE THE HOLE. SLOPES MYST BE LAID BACK OR SHORED AS REQUIRED. EXCAVATION MUST PROVIDE ADEQUATE SPACE TO CONNECT INLET AND OUTLET PIPES TO SEPARATOR MANHOLE AND THE BAYSAVER UNIT. INSTALL STRUCTURES ON SOLID SUBGRADE AS DIRECTED BY A GEOTECHNICAL ENGINEER.

3. VERIFY THE SUBGRADE ELEVATION AGAINST THE MANHOLE DIMENSIONS AND CONNECTING STORM DRAIN INVERTS. ADJUST BASE AGGREGATE IF NECESSARY

4. INSTALL PRIMARY AND STORAGE MANHOLES. MAKE SURE THE BASES ARE LEVEL AND THE STORAGE MANHOLE OPENINGS ARE ALIGNED WITH THE SEPARATOR UNIT. INSTALL RUBBER GASKETS ON BASE UNITS AND COAT WITH LUBRICATING GREASE. INSTALL ADDITIONAL MANHOLE SECTIONS AS REQUIRED.

5. SEAL ALL LIFT HOLES ACCORDING TO APPLICABLE REGULATIONS.

6. BACKFILL BASE SECTIONS OF MANHOLES TO INVERT OF STORAGE MANHOLE CONNECTING PIPES. USING APPROVED BACKFILL MATERIAL, BACKFILL AND COMPACT IN LIFTS WHICH ALLOW FOR ACCEPTABLE COMPACTION. BACKFILL AND COMPACTION SHOULD BE SUPERVISED BY A GEOTECHNICAL ENGINEER, AND IS CRITICAL TO PREVENT FAILURE OF THE SYSTEM.

7. INSTALL BAYSAVER SEPARATOR UNIT AND CONNECTING PIPES. SEAL ALL CONNECTING JOINTS AND INSTALL REDUCER OR REDUCER/ADAPTER. PROVIDE TEMPORARY SUPPORTS AND HOLD-DOWNS AS NECESSARY TO STABILIZE UNIT DURING REMAINING BACKFILL OPERATION.

8. BACKFILL SEPARATOR UNIT AND MANHOLES. AREAS NOT ACCESSIBLE TO COMPACTION EQUIPMENT MUST BE BACKFILLED WITH 3/4" MINUS STONE OR FLOWABLE FILL. CONCRETE BACKFILL IS NOT ACCEPTABLE. STONE BACKFILL MUST BE PLACED CAREFULLY TO PROVIDE SUITABLE BEDDING FOR THE BASAVER UNIT AND CONNECTION PIPES. BACKFILL COMPACTION SHOULD BE SUPERVISED BY A GEOTECHNICAL ENGINEER.

9. INSTALL AND SET MANHOLE COVER GRADE ADJUSTMENTS AS NECESSARY.

10. INSTALL AND SET MANHOLE FRAME AND COVER UNITS.

11. FILL STRUCTURES WITH WATER.

12. THE SEPARATION MANHOLE AND THE STORAGE MANHOLE SHALL BE CLEANED WHEN SEDIMENT CONTROL MEASURES ARE REMOVED AND THE SITE IS PERMANENTLY STABILIZED. SEDIMENT AND DEBRIS MUST BE DISPOSED OF PROPERLY.

GENERAL CONSTRUCTION NOTES

1. ALL WORK MUST BE DONE WITH REGARD FOR THE SAFETY OF THE CONSTRUCTION CREW.

2. ALL WORK AND MATERIALS MUST COMPLY WITH APPLICABLE STATE AND LOCAL REGULATIONS.

3. KNOW THE LOCATION AND DEPTH OF ANY UNDERGROUND UTILITIES BEFORE EXCAVATION BEGINS.

NOTE:

BAYSAVERS ARE TO BE INSTALLED WITH THE STORM DRAIN SYSTEM AND WILL FUNCTION AS SECONDARY SEDIMENT CONTROL DEVICES.

UPON COMPLETION OF SITE STABILIZATION, EACH BAYSAVER SYSTEM SHALL BE FLUSHED CLEAN & THE MANHOLES CLEANED OUT AND REFILLED WITH CLEAN WATER.

BAYSAVER SYSTEM DIMENSIONS

	DESCRIPTION	1K SYSTEM
	SEPARATOR MANHOLE DIMENSIONS	
A	PRIMARY MANHOLE DIAMETER	48"
B	MANHOLE DEPTH BELOW OUTLET	8' – 0"
C	MINIMUM FLUID DEPTH	8' – 3"
	STANDARD SEPARATOR UNIT DIMENSIONS	
D	SEPARATOR UNIT ID	24"
E	SEPARATOR UNIT LENGTH	60"
F	BYPASS PLATE LENGTH	34"
G	WEIR/BYPASS PLATE THICKNESS	1/2"
H	ELBOW AND CONNECTING PIPE OD	7.125"
I	ELBOW LENGTH	48"
J	WEIR HEIGHT ABOVE INVERT	3"
K	BYPASS PLATE HEIGHT ABOVE INVERT	12"
L	WIDTH OF WEIR AT BASE	3"
M	OUTLET PIPE DIAMETER	15"
N	ELBOW INVERT HEIGHT ABOVE UNIT INVERT	4 1/2"
O	ELBOW PIPE OVERHANG	12"
	STORAGE MANHOLE DIMENSIONS	
P	STORAGE MANHOLE DIAMETER	48"
Q	MANHOLE DEPTH BELOW INLET/OUTLET	48"
R	FLUID DEPTH	8' – 0"
S	TOTAL STORAGE VOLUME	200 CF
	SYSTEM DIMENSIONS AND ELEVATIONS	
T	SEPARATOR MANHOLE COVER ELEVATION	186.50
U	STORAGE MANHOLE COVER ELEVATION	186.50
V	SEPARATOR MANHOLE FLOOR ELEVATION	173.76
W	STORAGE MANHOLE FLOOR ELEVATION	173.76
X	INLET PIPE ID AND MATERIAL	15" HDPE
Y	INLET PIPE INVERT	182.01
Z	SEPARATOR UNIT INVERT	181.91
AA	OUTLET PIPE ID AND MATERIAL	15" HDPE
AB	ELBOW INVERT ELEVATION	182.01
AC	CONNECTING PIPE INVERT ELEVATION	177.76
AD	CONNECTION PIPE SPACING	20"
AE	STORAGE MANHOLE SIDE OFFSET	72 ± 6"
AF	STORAGE MANHOLE DOWNSTREAM OFFSET	23"

CHARLES COUNTY GOVERNMENT

Department of Planning and Growth Management
Development Services Department

APPROVED FOR:	*signatures*	construction *date*	as-builts *date*	*initials*
FLOODPLAINS		/ /	/ /	
GRADING		/ /	/ /	
ROADS		/ /	/ /	
STORM DRAINAGE		/ /	/ /	
STORM WATER MANAGEMENT		/ /	/ /	
WATER & SEWER		/ /	/ /	
OTHER		/ /	/ /	

Conditions and/or Remarks:
This approval expires two years from the date of issuance. Request of extensions must be made in writing and received by the development services department before the expiration date.

EXPIRATION DATE / /

Rev. No.	CONSTRUCTION REVISION
	PROJECT RECORD DRAWINGS

BAYSAVER® INC.
1010 DEER HOLLOW DRIVE
MT. AIRY, MD 21771
PH: (301) 829-6470 FAX: (301)-829-3747

DESIGNED:	TEP	DATE:	4/19/00
DRAWN:	ELT	SCALE:	AS NOTED
CHECKED:	TEP	SHEET:	1 OF 1

ENGINEERS:
Consulting Engineers
6715 Whittier Avenue 3rd Floor (703) 288-9560
Mc Lean, Virginia 22101 (703) 288-9555 (FAX)
WHITNEY, BAILEY, COX & MAGNANI, LLP

PGM # VC 02-0028

DRAWING:
BAYSAVER STANDARD DETAIL SHEET

BAYSAVER SEPARATION SYSTEM
STANDARD DETAILS AND DIMENSIONS

Design: C.K./K.H./S.S.			
Draft: K.D./C.S.	DATE: 02/05/02	DWG #:	C-5.2
Checked: C.K./J.K.	SCALE:		

04/11/02
DEC 2 4 2004
BID SET

Grimm and Parker Architects
1355 Beverly Road
Suite 105
McLean VA 22101
703.903.9100
703.903.9755 Fax

COLLEGE OF SOUTHERN MARYLAND WELLNESS CENTER
LA PLATA, MARYLAND

DATE	DESCRIPTION
4/26/02	BID SET

© GRIMM AND PARKER,P.C. 1999

© GRIMM AND PARKER,P.C. 2001

DEMOLITION NOTES

D1. ALL EXISTING STRUCTURE SHALL REMAIN, UNLESS NOTED OTHERWISE.

D2. ALL WORK SHOWN IS EXISTING TO REMAIN UNLESS NOTED OR INDICATED AS DASHED LINES TO BE REMOVED. THE EXTENT OF DEMOLITION WORK SHALL INCLUDE ALL INCIDENTAL DEMOLITION WORK NECESSARY TO PROPERLY PROVIDE ALL NEW WORK SHOWN AND SPECIFIED, TO INCLUDE MECHANICAL, ELECTRICAL, & PLUMBING ITEMS.

D3. DEMOLITION WORK SHOWN IS BASED ON EXISTING DRAWINGS AND INSPECTIONS. THE CONTRACTOR SHALL VISUALLY INSPECT ALL EXISTING CONDITIONS, AND IS RESPONSIBLE FOR PERFORMING THE INDICATED DEMOLITION WORK EVEN IF ACTUAL CONDITIONS DIFFER FROM THOSE SHOWN ON THE DRAWINGS.

D4. REMOVE, PATCH AND REPAIR PORTIONS OF WALL PARTITIONS, FLOORS, SURFACES WHICH CONFLICT WITH NEW WORK TO BE INSTALLED, EVEN IF NOT SPECIFICALLY NOTED TO BE DEMOLISHED ON PLANS.

D5. ANY FLOOR AREAS DAMAGED BY THE DEMOLITION CONTRACTOR SHALL BE PATCHED TO MATCH EXISTING.

D6. CONTRACTOR SHALL BE RESPONSIBLE FOR MAINTAINING THE INTEGRITY OF EXIST. BUILDING ELEMENTS TO REMAIN THROUGHOUT SEQUENCE OF WORK. ANY DAMAGE TO EXIST. BUILDING CONDITIONS SHOWN TO REMAIN SHALL BE RESTORED TO NEW WORK CONDITION AT NO ADDITIONAL COST TO THE OWNER.

D7. DEMOLITION CONTRACTOR SHALL COORDINATE WITH NEW WORK SECTIONS FOR ADDITIONAL INFORMATION RELATED TO EXTENT OF DEMOLITION.

D8. COORDINATE DEMOLITION OF ALL STRUCTURAL ITEMS (COLUMNS, BEAMS, SLABS, ETC.) WITH STRUCTURAL DWGS. EXTENT OF DEMOLITION AREA SHALL BE IN ACCORDANCE WITH STRUCTURAL REQUIREMENTS AND COORDINATED WITH ALL NEW WORK.

D9. REMOVE MECHANICAL, ELECTRICAL AND PLUMBING ITEMS AS NOTED ON MECHANICAL, ELECTRICAL, AND PLUMBING PLANS. COORDINATE WITH CIVIL, STRUCTURAL, MECHANICAL, ELECTRICAL, AND PLUMBING FOR ADDITIONAL DEMOLITION NOTES. REMOVAL WORK IS INTENDED TO INCLUDE ALL ASSOCIATED ITEMS SUCH AS ELECTRICAL OUTLETS, SWITCHES, CONDUITS, CONTROLS, PIPING, MOUNTING BLOCKS, ETC., AS NOTED. THE CONTRACTOR SHALL REFER TO ALL CIVL, STRUCTURAL, MECHANICAL, ELECTRICAL AND PLUMBING DRAWINGS AND SPECIFICATIONS FOR PROCEDURES CONCERNING RELATED TRADES IN AREAS WHICH REQUIRE DEMOLITION. REPAIR AND PATCH ANY AREAS DAMAGED DURING REMOVAL WORK.

D10. PARTITIONS SHOWN TO BE REMOVED SHALL BE CONFIRMED BY THE CONTRACTOR AS TO TYPE OF PARTITION AND EXACT LOCATION. COMPLETELY REMOVE PARTITIONS FROM FLOOR TO STRUCTURE ABOVE INCLUDING BASE, ALL FASTENERS, GROUTS, SEALANTS, ETC., UNLESS NOTED OTHERWISE. MASONRY PARTITIONS WHICH EXTEND THROUGH THE SLAB SHALL BE REMOVED TO 8" BELOW FINISH FLOOR. FILL SLAB OPENING WITH CONCRETE FILL TO RECEIVE FINISH FLOOR. WHERE WALLS SCHEDULED TO BE REMOVED SIT ON SLABS, GRIND SLAB TO RECEIVE FINISH FLOOR.

D11. TEMPORARILY SUPPORT ALL BEAMS, LINTELS, PORTIONS OF WALLS ETC., TO BE DISTURBED BY DEMOLITION WORK, UNTIL THEY ARE RE-SUPPORTED BY NEW WORK

D12. WHERE NEW OPENINGS ARE SHOWN IN EXISTING WALLS, CAREFULLY REMOVE MASONRY TO NEAREST JOINT LINE WITHOUT DISTURBING ADJACENT WORK SO THAT NEW WORK CAN BE PATCHED IN TO MATCH. ALL NEW MASONRY WORK SHALL BE TOOTHED IN.

D13. WHERE FINISHES ARE INDICATED TO BE REMOVED, REMOVAL SHALL INCLUDE ANY GROUT, ADHESIVES, FASTENERS, AND ALL OTHER ITEMS USED TO ATTACH THE FINISHES TO THE SURFACES THAT THEY COVER.

D14. REFER TO ALL OTHER DRAWINGS IN THIS SET FOR INCIDENTAL DEMOLITION WORK NOT NOTED ON THE DEMOLITION PLANS.

D15. REMOVE ALL CURTAINS AND BLINDS IN AREAS OF RENOVATION OR DEMOLITION, UNLESS NOTED OTHERWISE.

D16. CONTRACTOR TO PROTECT ALL EQUIPMENT AND OTHER ELEMENTS IN AREA OF NEW OR DEMOLITION WORK.

D17. WHERE CEILINGS ARE TO BE REMOVED, REMOVE ALL CEILING SYSTEMS COMPLETE INCLUDING GRID, TRIM HANGERS, CLIPS, ETC. WHERE NEW CEILINGS ARE SPECIFIED, NO DOUBLE CEILINGS PERMITTED. REMOVE ALL ORIGINAL CONCEALED CEILINGS WHERE ENCOUNTERED.

D18. ALL EXISTING SURFACES TO REMAIN SHALL BE PROTECTED, PATCHED IF DAMAGED AND CLEANED PRIOR TO APPLICATION OF FINISHES.

D19. THE OWNER HAS FIRST RIGHT OF REFUSAL OF ALL SALVAGE ITEMS. THE CONTRACTOR SHALL PROPERLY DISPOSE OF ALL CONSTRUCTION DEBRIS. DO NOT STOCKPILE DEBRIS ON SITE.

D20. ITEMS TO BE DEMOLISHED SHALL BE REMOVED COMPLETELY INCLUDING ALL ANCHORS, HANGERS, FASTENERS, PIPES, CONDUITS, DUCTS, ETC. UNLESS OTHERWISE INDICATED TO BE ABANDONED IN PLACE.

D21. CONC. SLAB PATCHES MUST BE FLUSH WITH REMAINING SURFACES TO PERMIT APPLICATION OF FINISHES. PROVIDE WELDED WIRE MESH IN PATCH AREAS LARGER THAN (4) FOUR SQUARE FEET.

D22. WALLS TO BE REMOVED FROM INTERSECTING WALLS SHALL INCLUDE TOOTHED IN REPLACEMENT OF DAMAGED MASONRY ON WALL TO REMAIN AND REMOVAL OF TIES PROJECTING FROM WALLS. SEE DETAILS FOR ADDITIONAL CONDITIONS.

D23. WALLS TO BE PARTIALLY REMOVED SHALL BE TERMINATED WITH FINISHED MASONRY ENDS BY TOOTHING IN NEW MASONRY UNITS, TO MATCH ADJACENT MASONRY. SEE DETAILS FOR OTHER CONDITIONS. NO WALLS SHALL BE TERMINATED WITH EXPOSED OPEN CELLS OR DAMAGED MASONRY UNITS.

D24. WINDOWS SCHEDULED FOR REMOVAL SHALL BE REMOVED COMPLETELY. FASTENERS MAY BE CUT FLUSH WITH HEAD, JAMBS, AND SILLS IF THE NEW WINDOW UNIT WILL CONCEAL FASTENERS. PROTECT EXISTING SILLS SCHEDULED TO REMAIN. ALL EXISTING WINDOW OPENINGS MUST BE FIELD MEASURED PRIOR TO SUBMITTAL OF SHOP DRAWINGS.

D25. CONC. SLABS TO REMAIN SHALL BE PATCHED, SCRAPED, LEVELED, AND CLEANED TO PROVIDE SURFACE SUITABLE FOR NEW FINISHES.

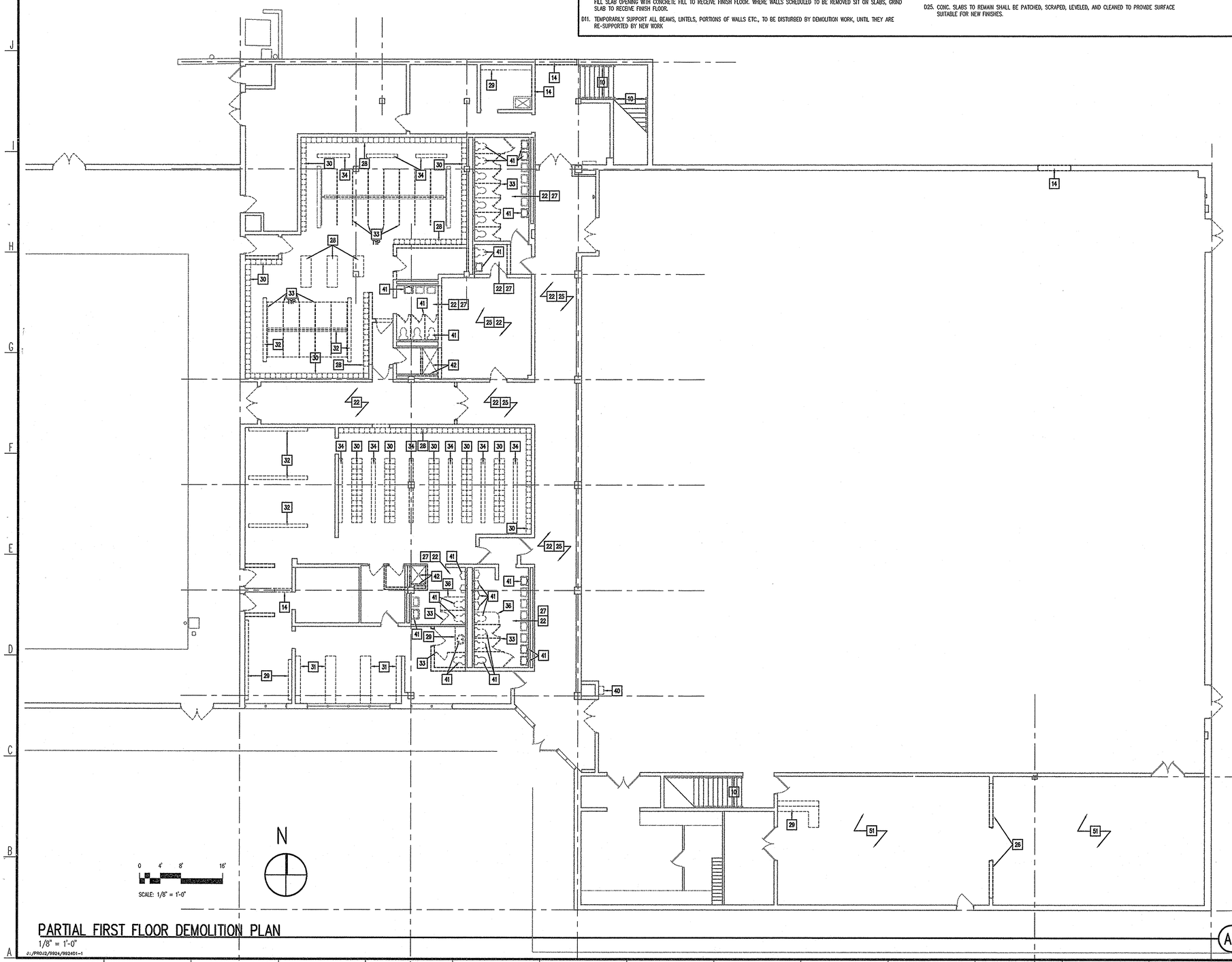

PARTIAL FIRST FLOOR DEMOLITION PLAN
1/8" = 1'-0"
J:/PROJ2/9924/992401-1

SCALE: 1/8" = 1'-0"

DEMOLITION KEY NOTES (REFER TO PLAN)

NOT ALL KEY NOTES ARE REPRESENTED IN PROJECT

1 REMOVE EXISTING STRUCTURE COMPLETELY, INCLUDING ROOF, WALLS, SLABS, DOORS, WINDOWS, FRAMES & FOUNDATION.

2 REMOVE ENTIRE WALL STRUCTURE DOWN TO SLAB (INCLUDING MASONRY, DOORS, AND WINDOWS). WHERE WALL PENETRATES SLAB, REMOVE WALL TO 8" BELOW SLAB. PATCH AND LEVEL FLOOR TO RECEIVE NEW FINISHES. CAREFULLY REMOVE MASONRY, SO NEW CAN BE TOOTHED IN. ALL EXISTING S.G.F.T. INDICATED TO BE REMOVED SHALL BE SALVAGED FOR LATER USE IN PATCHING TO MATCH

3 REMOVE EXTERIOR MASONRY WALL (BRICK & CMU), INCLUDING ALL WINDOWS, DOORS, FOUNDATIONS, ETC.

4 REMOVE EXTERIOR MAS. WALL (BRICK & CMU), INCLUDING ALL WINDOWS, DOORS, ETC. IN THIS WALL. EXIST. FOUNDATION & FOOTING TO REMAIN IN PLACE FOR REUSE W/ NEW EXTERIOR CLOSURE SYSTEM - SEE STRUCT. DWGS.

5 REMOVE CONC. SLAB ON GRADE AND ALL SUBSURFACE MATERIALS ASSOCIATED WITH SLAB ON GRADE CONSTRUCTION. REMOVE ALL INTERIOR CONSTUCTION LOCATED W/IN DESIGNATED AREAS UNLESS SPECIFICALLY NOTED OTHERWISE.

6 REMOVE ROOF STRUCTURE, ROOFING AND FLASHING COMPLETELY.

7 REMOVE EXTERIOR CONCRETE WALL - SEE STRUCTURAL FOR ADDITIONAL NOTES

8 IN TOILET ROOMS REMOVE THE FOLLOWING: WING WALLS, TOILET PARTITIONS, CEILING, CERAMIC WALL TILE WAINSCOT, INDICATED PLUMBING FIXTURES AND ASSOCIATED ACCESSORIES. COORD. W/ M.E.P. FOR ADDITIONAL DEMOLITION. PATCH FLOOR & WALL.

9 NOT USED

10 REMOVE HANDRAIL / GUARDRAIL COMPLETELY. PATCH EXISTING WALL OR FLOOR TO MATCH EXISTING

11 REMOVE WINDOW, SILL & WALL CONSTRUCTION BELOW SILL DOWN TO SLAB.

12 REMOVE DOOR(S) AND FRAME(S). (TO INCLUDE STOPS & HOLD OPENS WHERE THEY OCCUR)

13 REMOVE DOOR ONLY, FRAME TO REMAIN AND BE REUSED WITH NEW DOOR.

14 REMOVE PORTION OF WALL FOR NEW OPENING, INSTALL NEW LINTEL PER STRUCTURAL SCHEDULE. SEE NEW WORK PLANS FOR SIZE OF OPENINGS. CAREFULLY REMOVE EXISTING MASONRY SO NEW MASONRY CAN BE TOOTHED-IN. ALL EXISTING S.G.F.T. INDICATED TO BE REMOVED SHALL BE SALVAGED FOR LATER USE IN PATCHING TO MATCH. PATCH AND LEVEL FLOOR TO RECEIVE NEW FINISHES.

15 ENLARGE OPENING FOR NEW DOOR OPENING, INSTALL NEW LINTEL PER STRUCTURAL SCHEDULE. SEE NEW WORK PLANS FOR SIZE OF OPENINGS. CAREFULLY REMOVE EXISTING FRAME, DOOR/WINDOW AND EXISTING MASONRY SO NEW MASONRY CAN BE TOOTHED-IN. PATCH AND LEVEL FLOOR TO RECEIVE NEW FINISHES.

16 CAREFULLY REMOVE EXISTING LOUVER AND REPLACE AS PER MECHANICAL DRAWINGS.

17 CAREFULLY REMOVE EXTERIOR LOUVER. INFILL W/ MASONRY CONSTRUCTION AS NOTED ON ELEVATIONS.

18 REMOVE EXISTING WINDOW, INCLUDING FRAME, CLIPS, ETC.

19 REMOVE STOREFRONT FRAMING SYSTEM INCLUDING GLAZING, DOORS, HARDWARE, CLIPS, ETC.

20 REMOVE ALL CERAMIC AND/OR QUARRY TILE & SETTING BED MATERIALS FROM WALLS AND FLOOR IN THIS AREA. PATCH AND LEVEL FOR NEW FLOOR.

21 REMOVE ALL FINISHES INCLUDING FLOORING, FIXTURES, CASEWORK, SHELVING, BASE, CHALK & TACK BOARDS, PROJECTION SCREEN, WINDOW TREATMENT, SINKS, PLUMBING FIXTURES, CHASES, MECHANICAL UNITS, ELECTRICAL ITEMS, CEILING & CEILING SUPPORT MEMBERS & ALL BULKHEADS. COORD. W/ M.E.P. FOR ADD. DEMO.

22 REMOVE LIGHTS, CEILING AND CEILING SUPPORT MEMBERS. CEILING REMOVAL INCLUDES ALL BULKHEADS (PLASTER, GYP. BD. OR ACOUS. TILE) U.N.O.

23 EXISTING FLOOR FINISH TO REMAIN. PROTECT DURING CONSTRUCTION. SEE NEW WORK PLANS FOR AREAS TO PATCH.

24 DEMOLISH WALL AS PART OF ALTERNATE 1 ONLY.

25 REMOVE FINISH FLOORING & BASE AND ALL ADHESIVES, GROUT, ETC. FROM EXISTING SLAB. PREPARE SLAB TO RECEIVE NEW FINISH

26 DEMOLISH WALL AS PART OF ALTERNATE 2 ONLY.

27 REMOVE CERAMIC WALL TILE AND BASE. PREPARE SLAB TO RECEIVE NEW FINISH

28 REMOVE LOCKERS, INCLUDING BASE, WALL CLEATS AND ANCHORS.

29 REMOVE EXISTING CASEWORK.

30 REMOVE LOCKERS. EXISTING LOCKER BASE TO REMAIN

31 REMOVE WOOD CASEWORK, EXISTING LOCKER BASE TO REMAIN.

32 REMOVE EXISTING STAINLESS STEEL SHOWER SYSTEM, INCLUDING ALL ASSOCIATED PLUMBING. CAP EXISTING PLUMBING PIPES AS NECESSARY. PATCH EXISTING WALL TO MATCH ADJACENT SURFACE. SEE PLUMBING DRAWINGS FOR ADDITIONAL NOTES

33 REMOVE TOILET PARTITIONS

34 REMOVE BENCH

35 NOT USED

36 REMOVE CURTAIN AND TRACK.

37 REMOVE CHALKBOARD / TACKBOARD

38 REMOVE TELEPHONE AND ASSOCIATED CASE.

39 REMOVE BLEACHERS

40 REMOVE E.W.C. OR DRINKING FOUNTAIN, SEE M.E.P. DRAWING FOR EXTENT OF PIPING TO BE REUSED.

41 REMOVE PLUMBING FIXTURES AND ACCESSORIES. SEE M.E.P. FOR FIXTURE AND PIPING DEMOLITION. PATCH FLOOR AND WALL FINISHES TO MATCH EXISTING.

42 DEMOLISH EXISTING SHOWER PAN. PROVIDE SMOOTH, LEVEL FLOOR SURFACE TO MATCH ADJACENT FLOOR. REMOVE EXISTING SHOWER HEAD ASSEMBLY. SEE PLUMBING DRAWINGS FOR REMOVAL OF PIPING ETC.

43 REMOVE EXISTING MECHANICAL UNIT VENTILATOR INCLUDING ALL ASSOCIATED PLUMBING. CAP ALL PLUMBING PIPES AS NECESSARY. PATCH AND LEVEL FLOOR TO MATCH EXISTING.

44 REMOVE MECHANICAL UNIT AND ASSOCIATED PIPING, EXTERIOR LOUVERS, ETC. - SEE MECHANICAL DWGS.

45 REMOVE EXHAUST / FUME HOODS, COORD. W/ M.E.P. DWGS. FOR EXISTING OPENINGS TO BE REUSED. ABANDONED PENETRATIONS SHALL BE INFILLED PER DETAILS.

46 REMOVE PORTION OF EXISTING CONCRETE CURB. (SEE CIVIL DWGS.)

47 REMOVE PORTION OF CONCRETE SIDEWALK. (SEE CIVIL DWGS.)

48 REMOVE EXTERIOR CONCRETE STEPS, HANDRAILS AND ALL FOUNDATIONS.

49 REMOVE EXISTING METAL LIGHTPOST, INCLUDING CONCRETE BASE AND FOOTINGS.

50 REMOVE EXISTING CHAIN LINK FENCE, INCLUDING ALL GATES & SUPPORT POSTS.

51 REMOVE EXISTING FLOORING INCLUDING ALL ADHESIVES, ETC. FROM FLOOR SLAB

52 REMOVE PROJECTION SCREEN AND BRACKETS. PATCH WALL.

DEMOLITION LEGEND

- EXIST. WALL TO BE DEMOLISHED
- EXIST. DOOR & FRAME TO BE REMOVED
- EXIST. DOOR & FRAME TO REMAIN
- EXIST. COLUMN TO REMAIN
- EXIST. COLUMN TO BE REMOVED
- EXIST. ITEM TO BE DEMOLISHED (SEE SPECIFIC NOTE)
- AREA OF BUILDING TO BE COMPLETELY DEMOLISHED
- AREA OF EXISTING SLAB-ON-GRADE TO BE COMPLETELY DEMOLISHED
- AREA OF EXIST. STRUCTURAL SLAB TO BE COMPLETELY DEMOLISHED

PROJECT RECORD DRAWINGS

RECEIVED
OCT 25 2004
CIPE ASSOC.

college of southern maryland

Grimm and Parker Architects

1355 Beverly Rd.
Suite 105
McLean VA 22101
703.903.9100
703.903.9755 Fax

I CERTIFY THAT THESE DOCUMENTS WERE PREPARED OR APPROVED BY ME, AND THAT I AM A DULY LICENSED ARCHITECT UNDER THE LAWS OF MARYLAND, LICENSE NO. 9060 EXPIRATION DATE 6/10/04.

PARTIAL FIRST FLOOR PLAN - DEMOLITION
COLLEGE OF SOUTHERN MARYLAND WELLNESS CENTER
LA PLATA, MARYLAND

DATE	DESCRIPTION
4/30/03	BID SET

© GRIMM AND PARKER,P.C. 2001

D-1.1

DGS# - CC-09-MC99-311

© GRIMM AND PARKER,P.C. 2001

DEMOLITION NOTES

D1. ALL EXISTING STRUCTURE SHALL REMAIN, UNLESS NOTED OTHERWISE.

D2. ALL WORK SHOWN IS EXISTING TO REMAIN UNLESS NOTED OR INDICATED AS DASHED LINES TO BE REMOVED. THE EXTENT OF DEMOLITION WORK SHALL INCLUDE ALL INCIDENTAL DEMOLITION WORK NECESSARY TO PROPERLY PROVIDE ALL NEW WORK SHOWN AND SPECIFIED, TO INCLUDE MECHANICAL, ELECTRICAL, & PLUMBING ITEMS.

D3. DEMOLITION WORK SHOWN IS BASED ON EXISTING DRAWINGS AND INSPECTIONS. THE CONTRACTOR SHALL VISUALLY INSPECT ALL EXISTING CONDITIONS, AND IS RESPONSIBLE FOR PERFORMING THE INDICATED DEMOLITION WORK EVEN IF ACTUAL CONDITIONS DIFFER FROM THOSE SHOWN ON THE DRAWINGS.

D4. REMOVE, PATCH AND REPAIR PORTIONS OF WALL PARTITIONS, FLOORS, SURFACES WHICH CONFLICT WITH NEW WORK TO BE INSTALLED, EVEN IF NOT SPECIFICALLY NOTED TO BE DEMOLISHED ON PLANS.

D5. ANY FLOOR AREAS DAMAGED BY THE DEMOLITION CONTRACTOR SHALL BE PATCHED TO MATCH EXISTING.

D6. CONTRACTOR SHALL BE RESPONSIBLE FOR MAINTAINING THE INTEGRITY OF EXIST. BUILDING ELEMENTS TO REMAIN THROUGHOUT SEQUENCE OF WORK. ANY DAMAGE TO EXIST. BUILDING CONDITIONS SHOWN TO REMAIN SHALL BE RESTORED TO NEW WORK CONDITION AT NO ADDITIONAL COST TO THE OWNER.

D7. DEMOLITION CONTRACTOR SHALL COORDINATE WITH NEW WORK SECTIONS FOR ADDITIONAL INFORMATION RELATED TO EXTENT OF DEMOLITION.

D8. COORDINATE DEMOLITION OF ALL STRUCTURAL ITEMS (COLUMNS, BEAMS, SLABS, ETC.) WITH STRUCTURAL DWGS. EXTENT OF DEMOLITION AREA SHALL BE IN ACCORDANCE WITH STRUCTURAL REQUIREMENTS AND COORDINATED WITH ALL NEW WORK.

D9. REMOVE MECHANICAL, ELECTRICAL AND PLUMBING ITEMS AS NOTED ON MECHANICAL, ELECTRICAL, AND PLUMBING PLANS. COORDINATE WITH CIVIL, STRUCTURAL, MECHANICAL, ELECTRICAL, AND PLUMBING FOR ADDITIONAL DEMOLITION NOTES. REMOVAL WORK IS INTENDED TO INCLUDE ALL ASSOCIATED ITEMS SUCH AS ELECTRICAL OUTLETS, SWITCHES, CONDUITS, CONTROLS, PIPING, MOUNTING BLOCKS, ETC., AS NOTED. THE CONTRACTOR SHALL REFER TO ALL CIVIL, STRUCTURAL, MECHANICAL, ELECTRICAL AND PLUMBING DRAWINGS AND SPECIFICATIONS FOR PROCEDURES CONCERNING RELATED TRADES IN AREAS WHICH REQUIRE DEMOLITION. REPAIR AND PATCH ANY AREAS DAMAGED DURING REMOVAL WORK.

D10. PARTITIONS SHOWN TO BE REMOVED SHALL BE CONFIRMED BY THE CONTRACTOR AS TO TYPE OF PARTITION AND EXACT LOCATION. COMPLETELY REMOVE PARTITIONS FROM FLOOR TO STRUCTURE ABOVE INCLUDING BASE, ALL FASTENERS, GROUTS, SEALANTS, ETC., UNLESS NOTED OTHERWISE. MASONRY PARTITIONS WHICH EXTEND THROUGH THE SLAB SHALL BE REMOVED TO 8" BELOW FINISH FLOOR. FILL SLAB OPENING WITH CONCRETE FILL TO RECEIVE FINISH FLOOR. WHERE WALLS SCHEDULED TO BE REMOVED SIT ON SLABS, GRIND SLAB TO RECEIVE FINISH FLOOR.

D11. TEMPORARILY SUPPORT ALL BEAMS, LINTELS, PORTIONS OF WALLS ETC., TO BE DISTURBED BY DEMOLITION WORK, UNTIL THEY ARE RE-SUPPORTED BY NEW WORK

D12. WHERE NEW OPENINGS ARE SHOWN IN EXISTING WALLS, CAREFULLY REMOVE MASONRY TO NEAREST JOINT LINE WITHOUT DISTURBING ADJACENT WORK SO THAT NEW WORK CAN BE PATCHED IN TO MATCH. ALL NEW MASONRY WORK SHALL BE TOOTHED IN.

D13. WHERE FINISHES ARE INDICATED TO BE REMOVED, REMOVAL SHALL INCLUDE ANY GROUT, ADHESIVES, FASTENERS, AND ALL OTHER ITEMS USED TO ATTACH THE FINISHES TO THE SURFACES THAT THEY COVER.

D14. REFER TO ALL OTHER DRAWINGS IN THIS SET FOR INCIDENTAL DEMOLITION WORK NOT NOTED ON THE DEMOLITION PLANS.

D15. REMOVE ALL CURTAINS AND BLINDS IN AREAS OF RENOVATION OR DEMOLITION, UNLESS NOTED OTHERWISE.

D16. CONTRACTOR TO PROTECT ALL EQUIPMENT AND OTHER ELEMENTS IN AREA OF NEW OR DEMOLITION WORK.

D17. WHERE CEILINGS ARE TO BE REMOVED, REMOVE ALL CEILING SYSTEMS COMPLETE INCLUDING GRID, TRIM HANGERS, CLIPS, ETC. WHERE NEW CEILINGS ARE SPECIFIED, NO DOUBLE CEILINGS PERMITTED. REMOVE ALL ORIGINAL CONCEALED CEILINGS WHERE ENCOUNTERED.

D18. ALL EXISTING SURFACES TO REMAIN SHALL BE PROTECTED, PATCHED IF DAMAGED AND CLEANED PRIOR TO APPLICATION OF FINISHES.

D19. THE OWNER HAS FIRST RIGHT OF REFUSAL OF ALL SALVAGE ITEMS. THE CONTRACTOR SHALL PROPERLY DISPOSE OF ALL CONSTRUCTION DEBRIS. DO NOT STOCKPILE DEBRIS ON SITE.

D20. ITEMS TO BE DEMOLISHED SHALL BE REMOVED COMPLETELY INCLUDING ALL ANCHORS, HANGERS, FASTENERS, PIPES, CONDUITS, DUCTS, ETC. UNLESS OTHERWISE INDICATED TO BE ABANDONED IN PLACE.

D21. CONC. SLAB PATCHES MUST BE FLUSH WITH REMAINING SURFACES TO PERMIT APPLICATION OF FINISHES. PROVIDE WELDED WIRE MESH IN PATCH AREAS LARGER THAN (4) FOUR SQUARE FEET.

D22. WALLS TO BE REMOVED FROM INTERSECTING WALLS SHALL INCLUDE TOOTHED IN REPLACEMENT OF DAMAGED MASONRY ON WALL TO REMAIN AND REMOVAL OF TIES PROJECTING FROM WALLS. SEE DETAILS FOR ADDITIONAL CONDITIONS.

D23. WALLS TO BE PARTIALLY REMOVED SHALL BE TERMINATED WITH FINISHED MASONRY ENDS BY TOOTHING IN NEW MASONRY UNITS, TO MATCH ADJACENT MASONRY. SEE DETAILS FOR OTHER CONDITIONS. NO WALLS SHALL BE TERMINATED WITH EXPOSED OPEN CELLS OR DAMAGED MASONRY UNITS.

D24. WINDOWS SCHEDULED FOR REMOVAL SHALL BE REMOVED COMPLETELY. FASTENERS MAY BE CUT FLUSH WITH HEAD, JAMBS, AND SILLS IF THE NEW WINDOW UNIT WILL CONCEAL FASTENERS. PROTECT EXISTING SILLS SCHEDULED TO REMAIN. ALL EXISTING WINDOW OPENINGS MUST BE FIELD MEASURED PRIOR TO SUBMITTAL OF SHOP DRAWINGS.

D25. CONC. SLABS TO REMAIN SHALL BE PATCHED, SCRAPED, LEVELED, AND CLEANED TO PROVIDE SURFACE SUITABLE FOR NEW FINISHES.

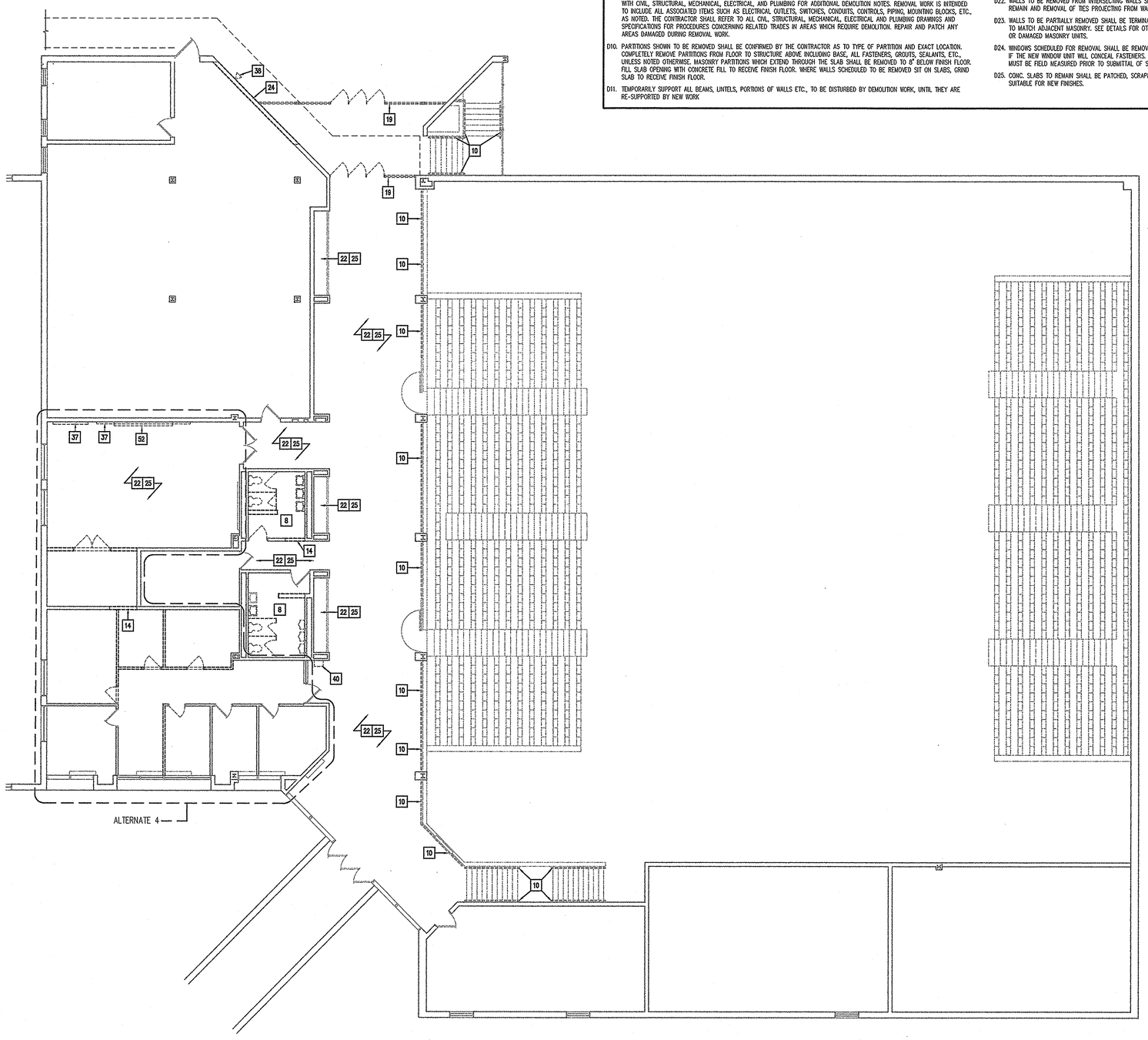

SCALE: 1/8" = 1'-0"

N

PARTIAL SECOND FLOOR DEMOLITION PLAN

1/8" = 1'-0"

A7

J:/PROJ2/9924/992401-2

DEMOLITION KEY NOTES ☑ (REFER TO PLAN)

NOT ALL KEY NOTES ARE REPRESENTED IN PROJECT

1. REMOVE EXISTING STRUCTURE COMPLETELY, INCLUDING ROOF, WALLS, SLABS, DOORS, WINDOWS, FRAMES & FOUNDATION.
2. REMOVE ENTIRE WALL STRUCTURE DOWN TO SLAB (INCLUDING MASONRY, DOORS, AND WINDOWS). WHERE WALL PENETRATES SLAB, REMOVE WALL TO 8" BELOW SLAB. PATCH AND LEVEL FLOOR TO RECEIVE NEW FINISHES. CAREFULLY REMOVE MASONRY, SO NEW CAN BE TOOTHED IN. ALL EXISTING S.G.F.T. INDICATED TO BE REMOVED SHALL BE SALVAGED FOR LATER USE IN PATCHING TO MATCH
3. REMOVE EXTERIOR MASONRY WALL (BRICK & CMU), INCLUDING ALL WINDOWS, DOORS, FOUNDATIONS, ETC.
4. REMOVE EXTERIOR MAS. WALL (BRICK & CMU), INCLUDING ALL WINDOWS, DOORS, ETC. IN THIS WALL. EXIST. FOUNDATION & FOOTING TO REMAIN IN PLACE FOR REUSE W/ NEW EXTERIOR CLOSURE SYSTEM - SEE STRUCT. DWGS.
5. REMOVE CONC. SLAB ON GRADE AND ALL SUBSURFACE MATERIALS ASSOCIATED WITH SLAB ON GRADE CONSTRUCTION. REMOVE ALL INTERIOR CONSTUCTION LOCATED W/IN DESIGNATED AREAS UNLESS SPECIFICALLY NOTED OTHERWISE.
6. REMOVE ROOF STRUCTURE, ROOFING AND FLASHING COMPLETELY.
7. REMOVE EXTERIOR CONCRETE WALL - SEE STRUCTURAL FOR ADDITIONAL NOTES
8. IN TOILET ROOMS REMOVE THE FOLLOWING: WING WALLS, TOILET PARTITIONS, CEILING, CERAMIC WALL TILE WAINSCOT, INDICATED PLUMBING FIXTURES AND ASSOCIATED ACCESSORIES. COORD. W/ M.E.P. FOR ADDITIONAL DEMOLITION. PATCH FLOOR & WALL.
9. NOT USED
10. REMOVE HANDRAIL / GUARDRAIL COMPLETELY. PATCH EXISTING WALL OR FLOOR TO MATCH EXISTING
11. REMOVE WINDOW, SILL & WALL CONSTRUCTION BELOW SILL DOWN TO SLAB.
12. REMOVE DOOR(S) AND FRAME(S). (TO INCLUDE STOPS & HOLD OPENS WHERE THEY OCCUR)
13. REMOVE DOOR ONLY, FRAME TO REMAIN AND BE REUSED WITH NEW DOOR.
14. REMOVE PORTION OF WALL FOR NEW OPENING, INSTALL NEW LINTEL PER STRUCTURAL SCHEDULE. SEE NEW WORK PLANS FOR SIZE OF OPENINGS. CAREFULLY REMOVE EXISTING MASONRY SO NEW MASONRY CAN BE TOOTHED-IN. ALL EXISTING S.G.F.T. INDICATED TO BE REMOVED SHALL BE SALVAGED FOR LATER USE IN PATCHING TO MATCH. PATCH AND LEVEL FLOOR TO RECEIVE NEW FINISHES.
15. ENLARGE OPENING FOR NEW DOOR OPENING, INSTALL NEW LINTEL PER STRUCTURAL SCHEDULE. SEE NEW WORK PLANS FOR SIZE OF OPENINGS. CAREFULLY REMOVE EXISTING FRAME, DOOR/WINDOW AND EXISTING MASONRY SO NEW MASONRY CAN BE TOOTHED-IN. PATCH AND LEVEL FLOOR TO RECEIVE NEW FINISHES.
16. CAREFULLY REMOVE EXISTING LOUVER AND REPLACE AS PER MECHANICAL DRAWINGS.
17. CAREFULLY REMOVE EXTERIOR LOUVER. INFILL W/ MASONRY CONSTRUCTION AS NOTED ON ELEVATIONS.
18. REMOVE EXISTING WINDOW, INCLUDING FRAME, CLIPS, ETC.
19. REMOVE STOREFRONT FRAMING SYSTEM INCLUDING GLAZING, DOORS, HARDWARE, CLIPS, ETC.
20. REMOVE ALL CERAMIC AND/OR QUARRY TILE & SETTING BED MATERIALS FROM WALLS AND FLOOR IN THIS AREA. PATCH AND LEVEL FOR NEW FLOOR.
21. REMOVE ALL FINISHES INCLUDING FLOORING, FIXTURES, CASEWORK, SHELVING, BASE, CHALK & TACK BOARDS, PROJECTION SCREEN, WINDOW TREATMENT, SINKS, PLUMBING FIXTURES, CHASES, MECHANICAL UNITS, ELECTRICAL ITEMS, CEILING & CEILING SUPPORT MEMBERS & ALL BULKHEADS. COORD. W/ M.E.P. FOR ADD. DEMO.
22. REMOVE LIGHTS, CEILING AND CEILING SUPPORT MEMBERS. CEILING REMOVAL INCLUDES ALL BULKHEADS (PLASTER, GYP. BD. OR ACOUS. TILE) U.N.O.
23. EXISTING FLOOR FINISH TO REMAIN. PROTECT DURING CONSTRUCTION. SEE NEW WORK PLANS FOR AREAS TO PATCH.
24. DEMOLISH WALL AS PART OF ALTERNATE 1 ONLY.
25. REMOVE FINISH FLOORING & BASE AND ALL ADHESIVES, GROUT, ETC. FROM EXISTING SLAB. PREPARE SLAB TO RECEIVE NEW FINISH
26. DEMOLISH WALL AS PART OF ALTERNATE 2 ONLY.
27. REMOVE CERAMIC WALL TILE AND BASE. PREPARE SLAB TO RECEIVE NEW FINISH
28. REMOVE LOCKERS, INCLUDING BASE, WALL CLEATS AND ANCHORS.
29. REMOVE EXISTING CASEWORK.
30. REMOVE LOCKERS. EXISTING LOCKER BASE TO REMAIN
31. REMOVE WOOD CASEWORK, EXISTING LOCKER BASE TO REMAIN.
32. REMOVE EXISTING STAINLESS STEEL SHOWER SYSTEM, INCLUDING ALL ASSOCIATED PLUMBING. CAP EXISTING PLUMBING PIPES AS NECESSARY. PATCH EXISTING WALL TO MATCH ADJACENT SURFACE. SEE PLUMBING DRAWINGS FOR ADDITIONAL NOTES
33. REMOVE TOILET PARTITIONS
34. REMOVE BENCH
35. NOT USED
36. REMOVE CURTAIN AND TRACK.
37. REMOVE CHALKBOARD / TACKBOARD
38. REMOVE TELEPHONE AND ASSOCIATED CASE.
39. REMOVE BLEACHERS
40. REMOVE E.W.C. OR DRINKING FOUNTAIN, SEE M.E.P. DRAWING FOR EXTENT OF PIPING TO BE REUSED.
41. REMOVE PLUMBING FIXTURES AND ACCESSORIES. SEE M.E.P. FOR FIXTURE AND PIPING DEMOLITION. PATCH FLOOR AND WALL FINISHES TO MATCH EXISTING.
42. DEMOLISH EXISTING SHOWER PAN. PROVIDE SMOOTH, LEVEL FLOOR SURFACE TO MATCH ADJACENT FLOOR. REMOVE EXISTING SHOWER HEAD ASSEMBLY. SEE PLUMBING DRAWINGS FOR REMOVAL OF PIPING ETC.
43. REMOVE EXISTING MECHANICAL UNIT VENTILATOR INCLUDING ALL ASSOCIATED PLUMBING. CAP ALL PLUMBING PIPES AS NECESSARY. PATCH AND LEVEL FLOOR TO MATCH EXISTING.
44. REMOVE MECHANICAL UNIT AND ASSOCIATED PIPING, EXTERIOR LOUVERS, ETC. - SEE MECHANICAL DWGS.
45. REMOVE EXHAUST / FUME HOODS, COORD. W/ M.E.P. DWGS. FOR EXISTING OPENINGS TO BE REUSED. ABANDONED PENETRATIONS SHALL BE INFILLED PER DETAILS.
46. REMOVE PORTION OF EXISTING CONCRETE CURB. (SEE CIVIL DWGS.)
47. REMOVE PORTION OF CONCRETE SIDEWALK. (SEE CIVIL DWGS.)
48. REMOVE EXTERIOR CONCRETE STEPS, HANDRAILS AND ALL FOUNDATIONS.
49. REMOVE EXISTING METAL LIGHTPOST, INCLUDING CONCRETE BASE AND FOOTINGS.
50. REMOVE EXISTING CHAIN LINK FENCE, INCLUDING ALL GATES & SUPPORT POSTS.
51. REMOVE EXISTING FLOORING INCLUDING ALL ADHESIVES, ETC. FROM FLOOR SLAB
52. REMOVE PROJECTION SCREEN AND BRACKETS. PATCH WALL.

DEMOLITION LEGEND

- EXIST. WALL TO BE DEMOLISHED
- EXIST. DOOR & FRAME TO BE REMOVED
- EXIST. DOOR & FRAME TO REMAIN
- EXIST. COLUMN TO REMAIN
- EXIST. COLUMN TO BE REMOVED
- EXIST. ITEM TO BE DEMOLISHED (SEE SPECIFIC NOTE)
- AREA OF BUILDING TO BE COMPLETELY DEMOLISHED
- AREA OF EXISTING SLAB-ON-GRADE TO BE COMPLETELY DEMOLISHED
- AREA OF EXIST. STRUCTURAL SLAB TO BE COMPLETELY DEMOLISHED

PROJECT RECORD DRAWINGS

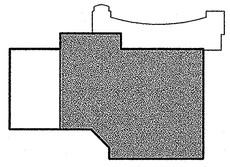

RECEIVED
OCT 25 2004
PLANNING

College of Southern Maryland

I CERTIFY THAT THESE DOCUMENTS WERE PREPARED OR APPROVED BY ME AND THAT I AM A DULY LICENSED ARCHITECT IN THE STATE OF MARYLAND, LICENSE NO. 9080 EXPIRATION DATE 6/10/04.

1355 Beverly Rd.
Suite 105
McLean VA 22101
703.903.9100
703.903.9755 Fax

Grimm and Parker Architects

PARTIAL SECOND FLOOR PLAN - DEMOLITION
COLLEGE OF SOUTHERN MARYLAND WELLNESS CENTER
LA PLATA, MARYLAND

DATE	DESCRIPTION
4/30/03	BID SET

© GRIMM AND PARKER,P.C. 2001

D-1.2

DGS# - CC-09-MC98-311

ELECTRICAL LEGEND

(MOUNTING HEIGHTS ARE TO CENTERLINE OF DEVICES UNLESS OTHERWISE NOTED)

LIGHTING

- A / 4a — FLUORESCENT FIXTURE – 2'x4' UPPERCASE LETTER INDICATES FIXTURE TYPE, NUMBER INDICATEDS CIRCUIT DESIGNATION, LOWER CASE LETTER WHERE APPLICABLE INDICATES SWITCH CONTROL DEVICE
- FLUORESCENT FIXTURE – 1'x4' AND STRIP LIGHT
- LIGHTING FIXTURE – WALL MOUNTED
- EXIT SIGN – CEILING, WALL MOUNTED – MOUNT 7'–6" AFF
- LIGHTING FIXTURES CONNECTED TO EMERGENCY CIRCUIT OR WITH EMERGENCY BALLAST
- FIXTURE CIRCUITED TO PROVIDE TWO LEVELS OF ILLUMINATION–OUTBOARD LAMPS AND INBOARD LAMP(S) SWITCHED SEPARATELY.
- FIXTURE CIRCUITED TO PROVIDE TWO LEVELS OF ILLUMINATION–OUTBOARD LAMPS AND INBOARD LAMP (ON EMERGENCY BALLAST) SWITCHED SEPARATELY.
- TRACK LIGHTING

SWITCHES

- $ ^{3} ^{4} — SWITCH – SINGLE POLE, THREE WAY AND FOUR WAY MOUNT 4'–0" AFF UNLESS OTHERWISE NOTED
- $_M — MANUAL MOTOR STARTER WITH H.O.A. SELECTOR SWITCH IN NEMA 1 ENCLOSURE. MOUNT 4'–0" AFF UNLESS OTHERWISE NOTED
- OS — OCCUPANCY SENSOR – CEILING MOUNTED
- ER — EMERGENCY RELAY

OUTLETS

- DUPLEX RECEPTACLE – 20 AMP., 2 POLE, 3 WIRE, GROUNDING TYPE, NEMA 5–20R. MOUNT 1'–6" AFF, UNLESS OTHERWISE NOTED
- QUAD RECEPTACLE – TWO NEMA 5–20R DUPLEX RECEPTACLES MOUNTED BENEATH COMMON DEVICE PLATE. MOUNT 1'–6" AFF UNLESS OTHERWISE NOTED
- (3) DUPLEX NEMA 520R RECEPTACLES MOUNTED BENEATH COMMON DEVICE PLATE. MOUNT 1'–6" AFF, UNLESS OTHERWISE NOTED
- FLUSH FLOOR MOUNTED DUPLEX RECEPTACLE (NEMA 20R), UNLESS OTHERWISE NOTED.
- DUPLEX RECEPTACLE – 20 AMP., 2 POLE, 3 WIRE, GROUND FAULT INTERRUPTING, NEMA 5–20R. MOUNT 1'–6" AFF, UNLESS OTHERWISE NOTED
- DUPLEX RECEPTACLE – 20 AMP., 2 POLE, 3 WIRE, CONNECTED TO EMERGENCY SOURCE, NEMA 5–20R. MOUNT 1'–6" AFF, UNLESS OTHERWISE NOTED
- SPECIAL RECEPTACLE–TYPE AS INDICATED MOUNT 1'–6" AFF UNLESS OTHERWISE NOTED
- FLOOR OUTLET BOX – FLUSH AND TOMBSTONE TYPE– WITH NUMBER AND TYPE OF DEVICE(S) AS INDICATED.

TELECOMMUNICATIONS

- TELEPHONE/DATA OUTLET, MOUNT 1'–6" AFF UNLESS OTHERWISE NOTED, SUBSCRIPT "S" INDICATES SURFACE MOUNTED
- W — TELEPHONE OUTLET, WALL MOUNTED; RJ45 MODULAR JACK MOUNT AT 4'–6" AFF UON
- A — TYPE "A" COMMUNICATIONS OUTLET – REFER TO DETAILS ON DWG. E6.2
- B — TYPE "B" COMMUNICATIONS OUTLET – REFER TO DETAILS ON DWG. E6.2
- C — TYPE "C" COMMUNICATIONS OUTLET – REFER TO DETAILS ON DWG. E6.2
- D — TYPE "D" COMMUNICATIONS OUTLET – REFER TO DETAILS ON DWG. E6.2
- P — PAY PHONE – MOUNT 42" AFF
- E — PROVISION FOR EMERGENCY WALL MOUNT PHONE – MOUNT 42" AFF
- V — VIDEO OUTLET

POWER

- PANELBOARD – M.H. 6'–6" AFF TO TOP OF PANEL
- T — TRANSFORMER
- MULTI–OUTLET ASSEMBLY – WITH NUMBER AND TYPE OF DEVICE(S) AS INDICATED. MOUNT 6" ABOVE COUNTER/SPLASHGUARD UNLESS OTHERWISE NOTED
- F — SAFETY DISCONNECT SWITCH – NON–FUSED, FUSED, SIZE AS INDICATED ON DRAWINGS. ENCLOSURE SHALL BE NEMA 1 UNLESS OTHERWISE NOTED, MOUNT 5'–6" AFF TO TOP UNLESS OTHERWISE NOTED
- STARTER, COMBINATION STARTER FVNR TYPE NEMA SIZE 1 UNLESS OTHERWISE NOTED, WITH FUSED DISCONNECT SWITCH, H.O.A. SELECTOR SWITCH, RED & GREEN INDICATING LIGHTS AND CONTROL POWER TRANSFORMER IN NEMA 1 ENCLOSURE UNLESS OTHERWISE NOTED, M.H. 5'–6" AFF TO TOP.
- UNDERGROUND CONCRETE ENCASED DUCTBANK – SIZE AS INDICATED ON DRAWINGS
- MOTOR
- J — JUNCTION BOX – CEILING, WALL MOUNTED
- CONTROLLER–TYPE AS NOTED
- PC — PHOTOCELL
- VFD — VARIABLE FREQUENCY DRIVE

CONDUIT

- HOME RUN TO PANELBOARD–SLASHES INDICATE NUMBER OF #12 AWG CONDUCTORS (GROUNDING CONDUCTOR NOT SHOWN BUT TO BE PROVIDED). WHERE NO SLASHES ARE SHOWN, PROVIDE 2#12 AND 1#12 AWG GROUND.
- CONDUIT OR WIRE CONCEALED IN CEILING SPACE, WALL OR SURFACE MOUNTED WHERE NO CEILING EXISTS
- CONDUIT OR WIRE ROUTED IN OR BELOW FLOOR SLAB

FIRE ALARM

- F — FIRE ALARM MANUAL PULL STATION – M.H. 4'–0" AFF
- FH — FIRE ALARM HORN – M.H. 7'–6" AFF
- FB — FIRE ALARM BELL – M.H. 7'–6" AFF OR 6" BELOW CEILING, WHICHEVER IS LOWER
- FH — FIRE ALARM HORN AND STROBE UNIT – M.H. 7'–6" AFF OR 6" BELOW CEILING, WHICHEVER IS LOWER
- 60 — FIRE ALARM STROBE LIGHT – NUMBER INDICATES CANDELA, NO NUMBER INDICATES 15 CANDELA, MOUNT 7'–6" AFF OR 6" BELOW CEILING, WHICHEVER IS LOWER
- FS — FIRE ALARM SPEAKER/STROBE – M.H. 7'–6" AFF
- SD — FIRE ALARM SMOKE DETECTOR – CEILING MOUNTED
- SDE — FIRE ALARM SMOKE DETECTOR – CEILING MOUNTED FOR ELEVATOR RECALL FUNCTION
- HD — FIRE ALARM HEAT DETECTOR – CEILING MOUNTED
- DD — DUCT TYPE SMOKE DETECTOR
- TS — SPRINKLER – TAMPER SWITCH
- FS — SPRINKLER – FLOW SWITCH
- FACP / FAAP — FIRE ALARM CONTROL PANEL, ANNUNCIATOR ALARM CONTROL PANEL OR GRAPHIC ANNUNCIATOR PANEL M.H. 5'–6" TO TOP
- DH — FIRE ALARM MAGNETIC DOOR HOLDER
- MM — MONITOR MODULE
- CM — CONTROL MODULE

SOUND

- S — CEILING MOUNTED SPEAKER
- S — WALL MOUNTED SPEAKER
- V — VOLUME CONTROL SWITCH
- C — CLOCK OUTLET M.H. 7'–0" AFF
- M — MICROPHONE OUTLET M.H. 18" AFF

WIRING

- 30 — FUSE – NUMBER INDICATES FUSE AMPERE RATING
- MOLDED CASE CIRCUIT BREAKER, RATING AS INDICATED – SEE SCHEDULE FOR TYPE AND ACCESSORIES
- PUSH–BUTTON SWITCH, NORMALLY OPEN
- PUSH–BUTTON SWITCH, NORMALLY CLOSED
- NORMALLY OPEN CONTACT
- NORMALLY CLOSED CONTACT
- R — RELAY COIL
- ST — SHUNT TRIP COIL
- INDICATING LIGHT: GREEN, RED
- THREE PHASE WYE CONNECTION WITH GROUNDED NEUTRAL
- THREE PHASE DELTA CONNECTION
- A / AS — AMMETER, AMMETER SWITCH
- V / VS — VOLTMETER, VOLTMETER SWITCH
- M — WATT/HOUR METER

MISCELLANEOUS

- 1 — DENOTES REFERENCE TO DRAWING NOTE
- ITEMS SHOWN DASHED/HEAVY ARE TO BE REMOVED
- ITEMS SHOWN SOLID/LIGHT ARE EXISTING TO REMAIN

SECURITY

- KP — KEYPAD – MOUNT 42" AFF
- CR — CARD READER – MOUNT 42" AFF
- DC — DOOR CONTACT
- X — REQUEST TO EXIT
- ML — MAGNETIC LOCK
- MANUAL DOOR RELEASE – MOUNT 42" AFF
- MS — MOTION SENSOR

ABBREVIATIONS:

A	AMP, AMPERE, AMPERES
AFF	ABOVE FINISHED FLOOR
AFG	ABOVE FINISHED GRADE
AHU	AIR HANDLING UNIT
C	CONDUIT
CATV	CABLE TELEVISION
CB	CIRCUIT BREAKER
CKT	CIRCUIT
DN	DOWN
DWG	DRAWING
ETR	EXISTING TO REMAIN
EWC	ELECTRIC WATER COOLER
EX	EXISTING
EXH	EXHAUST
F	FUSE, FUSIBLE
FA	FIRE ALARM
FAAP	FIRE ALARM ANNUNCIATOR PANEL
FACP	FIRE ALARM CONTROL PANEL
FCU	FAN COIL UNIT
FH	FUME HOOD
FO	FIBER OPTIC
FPB	FAN POWERED BOX
GFI	GROUND FAULT INTERRUPTING DEVICE
GRD	GROUND
GW	GROUND WIRE
HOA	HANDS–OFF AUTOMATIC
JB	JUNCTION BOX
KVA	KILO VOLT AMPERES
KVAR	REACTIVE KILO VOLT AMPERES
KW	KILO WATT AMPERES
LTG	LIGHTING
LV	LOW VOLTAGE
MATV	MASTER ANTENNA TELEVISION
MCB	MAIN CIRCUIT BREAKER
MFGR	MANUFACTURER
MH	MOUNTING HEIGHT OR MANHOLE
MLO	MAIN LUGS ONLY
MPOP	MAIN POINT OF PRESENCE
MTD	MOUNTED
NIC	NOT IN CONTRACT
NF	NON–FUSED
P	POLE, POLES
PNL	PANEL
PR	PAIR
RAF	RETURN AIR FAN
RX	REMOVE EXISTING
RGS	RIGID GALVANIZED STEEL
SS	SAFETY SWITCH
SAF	SUPPLY AIR FAN
SWBD	SWITCHBOARD
TTB	TELEPHONE TERMINAL BOARD
TYP	TYPICAL
UH	UNIT HEATER
UON	UNLESS OTHERWISE NOTED
V	VOLT, VOLTS
VFD	VARIABLE FREQUENCY DRIVE
WP	WEATHERPROOF
W	WIRE, WIRES
W/	WITH
Ø	PHASE
XFMR	TRANSFORMER

LIGHTING FIXTURE SCHEDULE

TYPE	DESCRIPTION	VOLTS	LAMPS	MOUNTING HEIGHT	MANUFACTURER AND CATALOG NO.	REMARKS
A	2'x4' PREMIUM TROFFER WITH KSH–19 PRISMATIC LENS, AND ONE 3–LAMP ELECTRONIC BALLAST	277	3–F32T8/ SPX35	RECESSED	LITHONIA 2SP8–G332–A19	
A1	2'x4' PREMIUM TROFFER WITH KSH–19 PRISMATIC LENS, AND TWO 2–LAMP ELECTRONIC BALLAST	277	4–F32T8/ SPX35	RECESSED	LITHONIA 2SP8–G432–A19	
A2	2'x4' PREMIUM TROFFER WITH KSH–19 PRISMATIC LENS, AND ONE 2–LAMP ELECTRONIC BALLAST	277	2–F32T8/ SPX35	RECESSED	LITHONIA 2SP8–G232–A19	
A3	SAME AS TYPE 'A' EXCEPT WITH ONE 2–LAMP ELECTRONIC BALLAST AND ONE 1–LAMP ELECTRONIC BALLAST					
B	DIRECT/INDIRECT WITH SEMI–SPECULAR LOUVER, AIRCRAFT CABLE SUSPENSION, ELECTRONIC BALLAST	277	3–F32T8/ SPX35	PENDANT	ICON INTERNATIONAL ORN–4233/3/*/EB/BN/EM	
C	2'x4' PREMIUM TROFFER 18– CELL, LOW IRIDESCENT SPECULAR PARABOLIC LOUVER WITH ONE 2–LAMP ELECTRONIC BALLAST AND ONE 1–LAMP ELECTRONIC BALLAST	277	3–F32T8/ SPX35	RECESSED	LITHONIA 2SP–G–332–36LS	
D	WET LOCATION COMPACT FLUORESCENT DOWNLIGHT	277	2–F26DTT/ SPX35	RECESSED	LITHONIA LGF–2/26DTT–7RW–T73	
F	4' FLUORESCENT STRIP WITH ELECTRONIC BALLAST	277	2–F32T8/ SPX35	PENDANT 9'–0" AFF	LITHONIA C232	
F1	(2) TYPE 'F' FIXTURES	277	4–F32T8/ SPX35	SURFACE (IN COVE)	LITHONIA C232	
G	4' INDUSTRIAL FLUORESCENT STRIP,10% UPLIGHT WITH ELECTRONIC BALLAST, WIRE GUARD	277	2–F32T8/ SPX35	PENDANT 9'–0" AFF	LITHONIA AF10–232–SQ*–WGAFPV	
H	HID WALL PACK WITH INTEGRAL PHOTOCELL AND INTEGRAL QUARTZ RESTRIKE, SANDSTONE HOUSING FOR WET LOCATION	277	1–100W MH	WALL 8'–0" AFF	STONCO LPSR100MAL–LPS3	
H1	HID WALL PACK FOR WET LOCATION	277	1–175W MH	WALL 16'–0" AFF	STONCO LPMR175MAL	
J	4' ALL PURPOSE WALL BRACKET FLUORESCENT STRIP WITH ELECTRONIC BALLAST	277	2–F32T8/ SPX35	WALL (OVER MIRROR)	LITHONIA WC 240 A12	
K	1'x4' WET LOCATION FLUORESCENT AND ONE 2–LAMP ELECTRONIC BALLAST	277	2–F32T8/ SPX35	PENDANT 8'–0" AFF	APPLETON VRS240–277	
L	6" DIAMETER COMPACT FLUORESCENT DOWNLIGHT WITH LOW IRIDESCENT SEMI–SPECULAR LOUVER	277	2–F18DTT/ SPX35	RECESSED	HALO C7218–2E–7250–LI–TRM8–P	
M	FLUORESCENT DIRECT WALL BRACKET WITH WHITE BLADE BAFFLES AND ELECTRONIC BALLAST	277	2–F32T8/ SPX35	WALL 6" TO TOP BELOW CEILING	LITECONTROL WD 66N–24 T8–BW	
N	1'x4' SURFACE WRAPAROUND WITH PRISMATIC ACRYLIC LENS, ELECTRONIC BALLAST	277	2–F32T8/ SPX35	PENDANT 10'–0" AFF	LITHONIA VC–232	
P	9" APERTURE HID DOWNLIGHT SPECULAR REFLECTOR	277	1–100W MH	RECESSED	LITHONIA AH100–9AR–277	
P1	9" APERTURE HID DOWNLIGHT SPECULAR REFLECTOR AND QUARTZ RESTRIKE	277	1–100W MH	RECESSED	LITHONIA AH100–9AR–277–QRS	
Q	HIGH BAY INDUSTRIAL WITH WIRE GUARD	277	1–400W MH	SURFACE	LITHONIA TE–400M– E17W–277	
Q1	HIGH BAY INDUSTRIAL WITH WIRE GUARD AND QUARTZ RESTRIKE	277	1–400W MH	SURFACE	LITHONIA TE–400M–E17W–277–QRS	
R	DECORATIVE PENDANT WITH OPAQUE ACRYLIC DIFFUSER, ALUMINUM ARMS WITH SILVER POWDER COAT FINISH, SUSPENDED BY FOUR AIRCRAFT CABLES ELECTRONIC BALLAST	277	4–F42TTT/ SPX35	PENDANT 60" BELOW CEILING	DELRAY LIGHTING 38124–42–UE	
S	WALL MOUNTED METAL HALIDE UPLIGHT WITH DIE CAST ALUMINUM HOUSING, WET LOCATION	277	1–100W MH	WALL	KIM WALL DIRECTOR SERIES WD18U2–100MH277–WHP A33–HSS14	REFER TO ARCH ELEVATIONS FOR MOUNTING HEIGHT
T	9" APERTURE EXTERIOR HID DOWNLIGHT SPECULAR REFLECTOR, DAMP LOCATION	277	1–100W MH	RECESSED	LITHONIA LGH–100M–9RW–277	
T1	9" APERTURE EXTERIOR HID DOWNLIGHT SPECULAR REFLECTOR, DAMP LOCATION AND QUARTZ RESTRIKE	277	1–100W MH	RECESSED	LITHONIA LGH–100M–9RW–277–QRS	
V	HID INDIRECT WALL SCONCE, SILVER FINISH	277	WALL	RECESSED	ELLIPTIPAR M404–0250–W–00 WITH ELB07 ENCLOSURE	REFER TO ARCH ELEVATIONS FOR MTG HT REFER TO NOTE 1
W	COMPACT FLUORESCENT STEP LIGHT WITH LOUVER GUARD, HPF BALLAST, WET LOCATION	277	1–F13W TT SPX35	WALL RECESSED 6" AFF	GARDCO 941–C–13TF–LV/FINISH TO BE SELECTED BY ARCHITECT	
X	4 FT UNDERCABINET FLUORESCENT ELECTRONIC BALLAST	120	1–F32T8/ SPX35	UNDER CABINET	ALKCO SOLID FRONT LINCS SFLINCS 150–048/ECB	
Y	HID VANDAL RESISTANT ROUND BOLLARD	277	1–70W MH	BOLLARD	KIM VRB2/70MH/FINISH TO BE SELECTED BY ARCHITECT	
AA	SAME AS TYPE "L" EXCEPT WITH DIMMING BALLAST(S)	277	2–F18DTT/ SPX35	RECESSED	HALO C7218–2E–7250–LI–TRM8–P–DIM	
	UNIT LIGHTING DUAL LAMP HEAD WITH INTEGRAL MAINTENANCE FREE BATTERY	277	1–PAR 36 25W	WALL 8'–0" AFF	HUBBELL HP–12–100–2–P12H	
	EMERGENCY LIGHTING UNIT WITH INTEGRAL MAINTENANCE–FREE NI–CAD BATTERY AND WEATHERPROOF REMOTE HEAD	277	1–12V 35W PAR46	WALL 8'–0"	LITHONIA ELU4 WITH ELA–WP REMOTE HEAD	PROVIDE ALL MOUNTING HARDWARE AND WIRING BETWEEN BATTERY AND REMOTE HEAD AS REQ'D
	EXIT LIGHT–BRUSHED ALUMINUM DIFFUSE RED PANEL ENCLOSURE WITH VANDAL RESISTANT SHIELD	277	LED'S	UNIVERSAL	LITHONIA SIGNATURE SERIES LE–S–1/2–R–120/277–VR	PROVIDE SINGLE OR DOUBLE FACED, WITH OR WITHOUT DIRECTIONAL CHEVRONS AS INDICATED ON THE DRAWINGS

NOTE 1: REMOTE MOUNT BALLAST IN CEILING SPACE ABOVE FIXTURE. PROVIDE WIRING BETWEEN BALLAST AND FIXTURE AS RECOMMENDED BY FIXTURE MFGR

GENERAL NOTES: (APPLY TO ALL DRAWINGS)

1. REFER TO ARCHITECTURAL DRAWINGS FOR PROJECT PHASING.

RECEIVED JUN 17 2005

RECEIVED OCT 25 2004 GIPE ASSOC.

PROJECT RECORD DRAWINGS

College of Southern Maryland

Gipe Associates Inc.
Consulting Engineers
Baltimore, Maryland
Easton, Maryland
GAI WO# 01044

"THIS DRAWING AND THE DESIGN AND CONSTRUCTION FEATURES DISCLOSED ARE PROPRIETARY TO GIPE ASSOCIATES, INC. AND SHALL NOT BE ALTERED OR REUSED IN WHOLE OR IN PART WITHOUT THE EXPRESS WRITTEN PERMISSION OF GIPE ASSOCIATES, INC. Copyright © 2001"

1355 Beverly Rd.
Suite 105
McLean VA 22101
703.903.9100
703.903.9755 Fax

Grimm and Parker Architects

ELECTRICAL LEGEND AND ABBREVIATIONS

COLLEGE OF SOUTHERN MARYLAND WELLNESS CENTER
LA PLATA, MARYLAND

DATE	DESCRIPTION
12–12–01	DD SUBMITTAL
2–8–02	DGS SUBMISSION
4–11–02	BID SET
4–30–03	BID SET

© GRIMM AND PARKER,P.C. 2001

E0.1

DGS# - CC–09–MC99–311

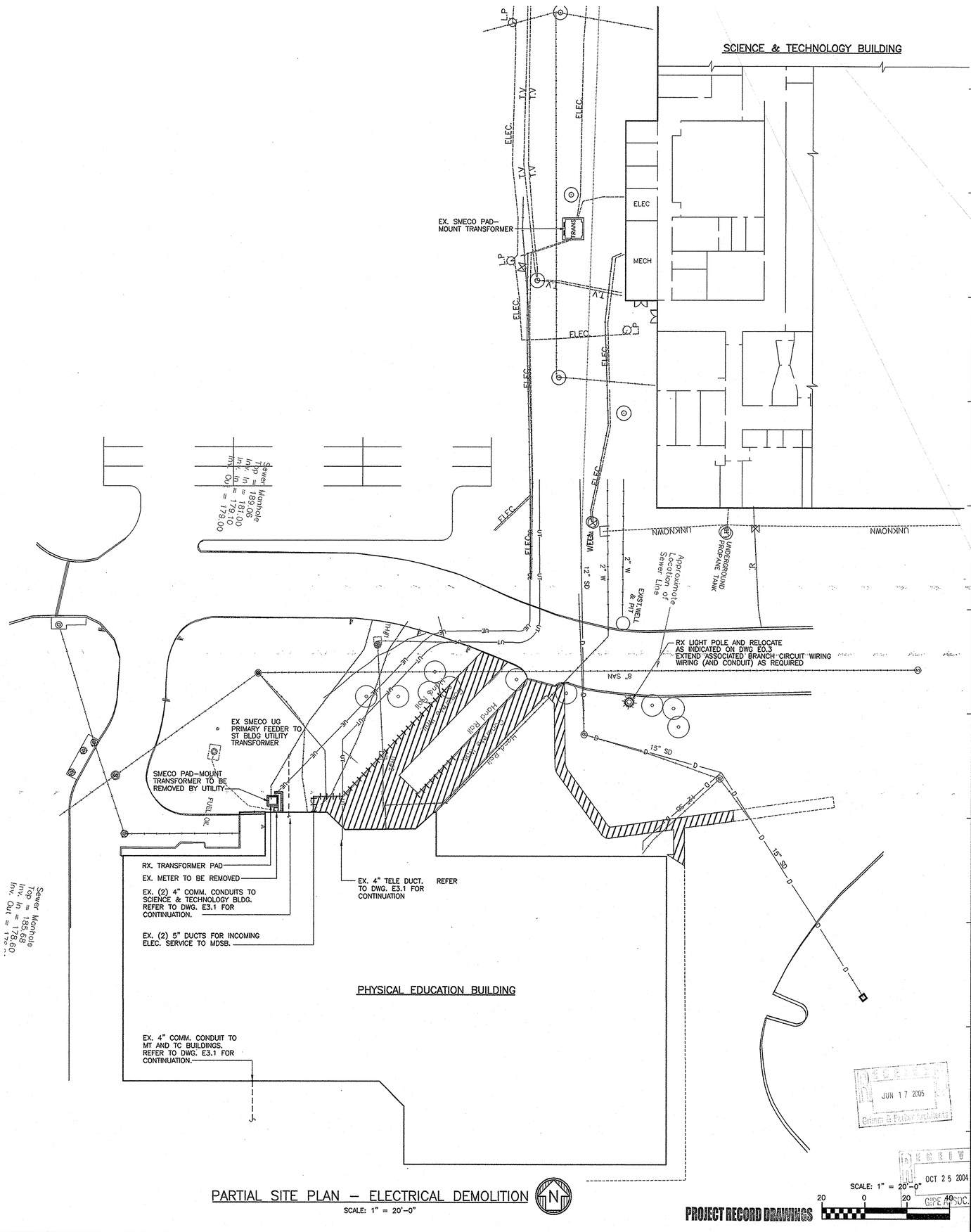

PARTIAL SITE PLAN – ELECTRICAL DEMOLITION

SCALE: 1" = 20'-0"

SCALE: 1" = 20'-0"

PROJECT RECORD DRAWINGS

RECEIVED JUN 17 2005 Grimm & Parker Architects

RECEIVED OCT 25 2004 GIPE ASSOC.

college of southern maryland

Gipe Associates Inc.
Consulting Engineers
Baltimore, Maryland
Easton, Maryland
GAI WO# 01044

"THIS DRAWING AND THE DESIGN AND CONSTRUCTION FEATURES DISCLOSED ARE PROPRIETARY TO GIPE ASSOCIATES, INC. AND SHALL NOT BE ASSIGNED, INCLUDED, SOLD OR DISCLOSED IN WHOLE OR IN PART WITHOUT THE EXPRESS WRITTEN PERMISSION OF GIPE ASSOCIATES, INC. Copyright © 2001"

1355 Beverly Rd.
Suite 105
McLean VA 22101
703.903.9100
703.903.9755 Fax

SMECO PAD MOUNT TRANSFORMER

Grimm and Parker Architects

PARTIAL SITE PLAN
ELECTRICAL DEMOLITION
COLLEGE OF SOUTHERN MARYLAND WELLNESS CENTER
LA PLATA, MARYLAND

DATE	DESCRIPTION
12-12-01	DD SUBMITTAL
2-8-02	DGS SUBMISSION
4-11-02	BID SET
4/30/03	BID SET

©GRIMM AND PARKER,P.C. 2001

E0.2

DGS# - CC-09-MC99-311

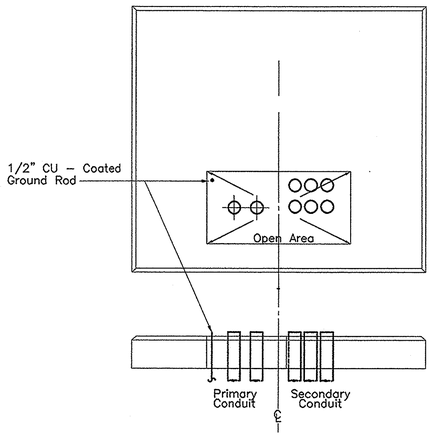

DETAIL "A" – TRANSFORMER PAD

NO SCALE

Notes:

A. The number of secondary conduits shall not exceed 8 total.

B. Secondary conduit shall be centered symmetrically within 18" X 16" area.

C. Relocate and/or provide new Copper – Coated Ground Rods as required to avoid incoming conduits.

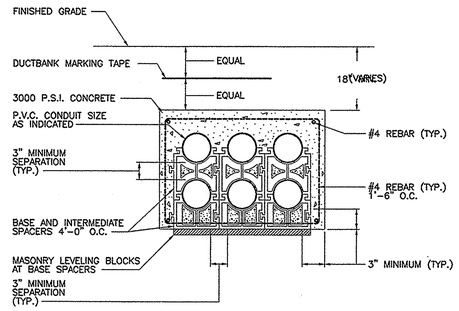

DETAIL – TYPICAL CONCRETE ENCASED SIX–WAY DUCT BANK

NO SCALE

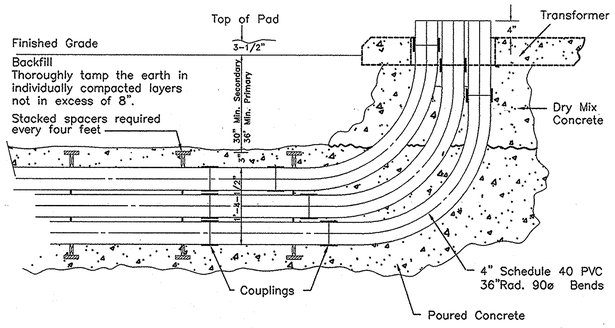

DETAIL "B" – TURNING CONDUITS INTO TRANSFORMER PADS

NO SCALE

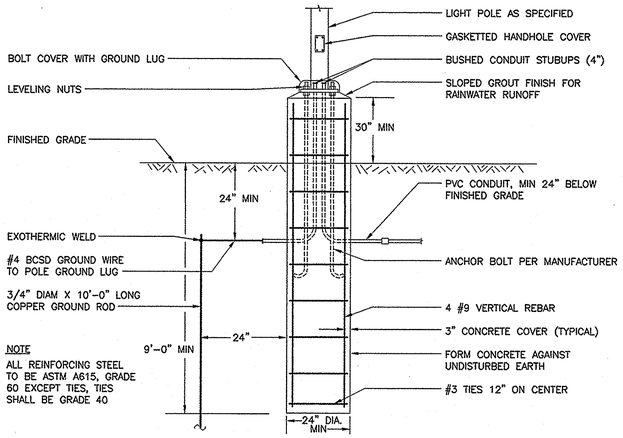

POLE BASE AND FOUNDATION

NO SCALE

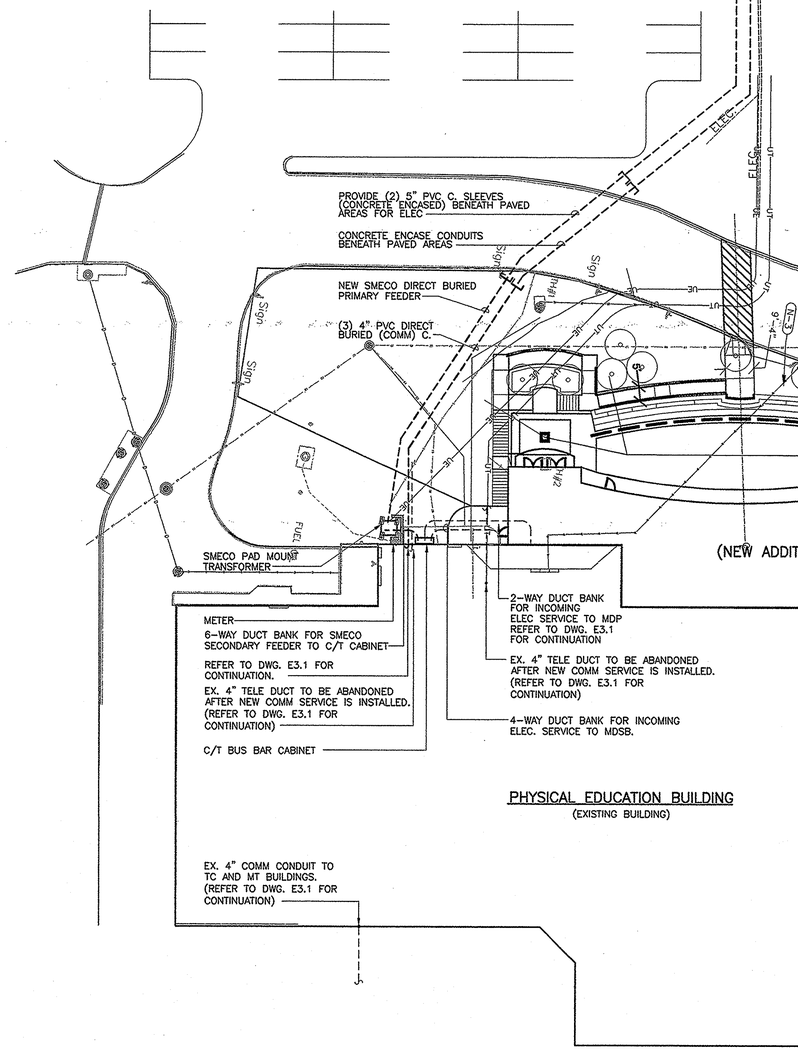

PARTIAL SITE PLAN – ELECTRICAL

SCALE: 1" = 20'-0"

N

SCALE: 1" = 20'-0"

20 0 20 40

PROJECT RECORD DRAWINGS

OCT 25 2005

RECEIVED JUN 17 2005 Grimm & Parker Architects

REGISTERED PROFESSIONAL ENGINEER

---

college of southern maryland

Gipe Associates Inc.
Consulting Engineers
Baltimore, Maryland
Easton, Maryland
GAI WO# 01044

"THIS DRAWING AND THE DESIGN AND CONSTRUCTION FEATURES DISCLOSED ARE PROPRIETARY TO GIPE ASSOCIATES, INC. AND SHALL NOT BE ALTERED OR REUSED IN WHOLE OR IN PART WITHOUT THE EXPRESS WRITTEN PERMISSION OF GIPE ASSOCIATES, INC. Copyright © 2001"

1355 Beverly Rd.
Suite 105
McLean VA 22101
703.903.9100
703.903.9755 Fax

SMECO PAD MOUNT TRANSFORMER

Grimm and Parker Architects

PARTIAL SITE PLAN
ELECTRICAL
COLLEGE OF SOUTHERN MARYLAND WELLNESS CENTER
LA PLATA, MARYLAND

DATE	DESCRIPTION
12-12-01	DD SUBMITTAL
2-8-02	DGS SUBMISSION
4-11-02	BID SET
4/26/02	BID SET

© GRIMM AND PARKER P.C. 2001

E0.3

DGS# - CC-09-MC99-311

DRAWING NOTES:

1. REMOVE FIXTURES ONLY. EX. CONDUIT & WIRING TO REMAIN FOR RECONNECTION TO NEW. REFER TO DRAWING E2.1.
2. RELOCATE EX. FIXTURES AS INDICATED ON DWG. E2.1 UNDER BASE BID.

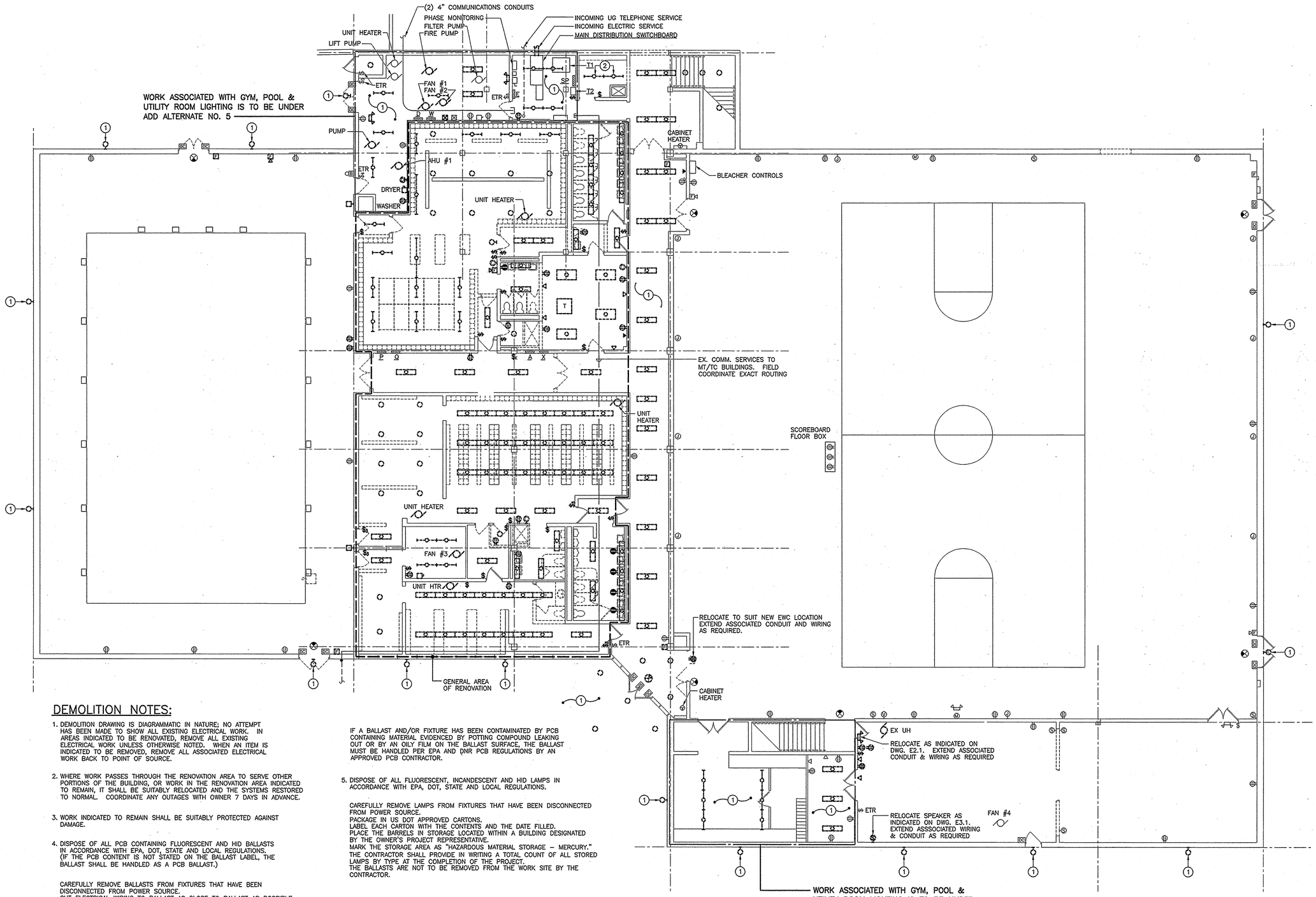

DEMOLITION NOTES:

1. DEMOLITION DRAWING IS DIAGRAMMATIC IN NATURE; NO ATTEMPT HAS BEEN MADE TO SHOW ALL EXISTING ELECTRICAL WORK. IN AREAS INDICATED TO BE RENOVATED, REMOVE ALL EXISTING ELECTRICAL WORK UNLESS OTHERWISE NOTED. WHEN AN ITEM IS INDICATED TO BE REMOVED, REMOVE ALL ASSOCIATED ELECTRICAL WORK BACK TO POINT OF SOURCE.
2. WHERE WORK PASSES THROUGH THE RENOVATION AREA TO SERVE OTHER PORTIONS OF THE BUILDING, OR WORK IN THE RENOVATION AREA INDICATED TO REMAIN, IT SHALL BE SUITABLY RELOCATED AND THE SYSTEMS RESTORED TO NORMAL. COORDINATE ANY OUTAGES WITH OWNER 7 DAYS IN ADVANCE.
3. WORK INDICATED TO REMAIN SHALL BE SUITABLY PROTECTED AGAINST DAMAGE.
4. DISPOSE OF ALL PCB CONTAINING FLUORESCENT AND HID BALLASTS IN ACCORDANCE WITH EPA, DOT, STATE AND LOCAL REGULATIONS. (IF THE PCB CONTENT IS NOT STATED ON THE BALLAST LABEL, THE BALLAST SHALL BE HANDLED AS A PCB BALLAST.)

CAREFULLY REMOVE BALLASTS FROM FIXTURES THAT HAVE BEEN DISCONNECTED FROM POWER SOURCE.
CUT ELECTRICAL WIRING TO BALLAST AS CLOSE TO BALLAST AS POSSIBLE.
HEPA VACUUM AND WET WIPE BALLASTS.
PACKAGE IN US DOT APPROVED TYPE 17C OR TYPE 17H BARRELS.
FILL BARRELS TO 2/3 CAPACITY ONLY WITH BALLASTS.
INSTALL GASKET ON LID, APPLY LOCK RING, AND SEAL.
APPLY EPA-APPROVED PCB LABELS TO THE BARRELS, INCLUDING THE DATE INDICATING WHEN WASTE WAS FIRST ADDED TO BARREL.
PLACE THE BARRELS IN STORAGE LOCATED WITHIN A BUILDING DESIGNATED BY THE OWNER'S PROJECT REPRESENTATIVE. DO NOT PLACE BARRELS OUTSIDE EXPOSED TO WEATHER. PROVIDE APPROVED PCB-ABSORBENT MATERIALS IMMEDIATELY ADJACENT TO THE BARREL STORAGE AREA. DO NOT PLACE LOOSE ABSORBENT MATERIAL IN THE DRUMS.
MARK THE BARREL STORAGE AREA WITH SIGNS, MARKS AND LINES PER CODE REGULATIONS.
THE CONTRACTOR SHALL PROVIDE IN WRITING A TOTAL BALLAST COUNT, OR THEIR TOTAL WEIGHT BY BARREL, INCLUDING THE STORAGE LOCATION. THE BALLASTS ARE NOT TO BE REMOVED FROM THE WORK SITE BY THE CONTRACTOR.

IF A BALLAST AND/OR FIXTURE HAS BEEN CONTAMINATED BY PCB CONTAINING MATERIAL EVIDENCED BY POTTING COMPOUND LEAKING OUT OR BY AN OILY FILM ON THE BALLAST SURFACE, THE BALLAST MUST BE HANDLED PER EPA AND DNR PCB REGULATIONS BY AN APPROVED PCB CONTRACTOR.

5. DISPOSE OF ALL FLUORESCENT, INCANDESCENT AND HID LAMPS IN ACCORDANCE WITH EPA, DOT, STATE AND LOCAL REGULATIONS.

CAREFULLY REMOVE LAMPS FROM FIXTURES THAT HAVE BEEN DISCONNECTED FROM POWER SOURCE.
PACKAGE IN US DOT APPROVED CARTONS.
LABEL EACH CARTON WITH THE CONTENTS AND THE DATE FILLED.
PLACE THE BARRELS IN STORAGE LOCATED WITHIN A BUILDING DESIGNATED BY THE OWNER'S PROJECT REPRESENTATIVE.
MARK THE STORAGE AREA AS "HAZARDOUS MATERIAL STORAGE – MERCURY."
THE CONTRACTOR SHALL PROVIDE IN WRITING A TOTAL COUNT OF ALL STORED LAMPS BY TYPE AT THE COMPLETION OF THE PROJECT.
THE BALLASTS ARE NOT TO BE REMOVED FROM THE WORK SITE BY THE CONTRACTOR.

FIRST FLOOR PLAN – ELECTRICAL DEMOLITION

SCALE: 1/8" = 1'-0"

RECEIVED JUN 17 2005

RECEIVED OCT 25 2004

PROJECT RECORD DRAWINGS

College of Southern Maryland

Gipe Associates Inc.
Consulting Engineers
Baltimore, Maryland
Easton, Maryland
GAI WO# 01044

"THIS DRAWING AND THE DESIGN AND CONSTRUCTION FEATURES DISCLOSED ARE PROPRIETARY TO GIPE ASSOCIATES, INC. AND SHALL NOT BE ALTERED OR REUSED IN WHOLE OR IN PART WITHOUT THE EXPRESS WRITTEN PERMISSION OF GIPE ASSOCIATES, INC. Copyright © 2001"

1355 Beverly Rd.
Suite 105
McLean VA 22101
703.903.9100
703.903.9755 Fax

Grimm and Parker Architects

FIRST FLOOR PLAN
ELECTRICAL DEMOLITION
COLLEGE OF SOUTHERN MARYLAND WELLNESS CENTER
LA PLATA, MARYLAND

DATE	DESCRIPTION
12-12-01	DD SUBMITTAL
2-8-02	DGS SUBMISSION
4-11-02	BID SET
4-30-03	BID SET

© GRIMM AND PARKER,P.C. 2001

SCALE: 1/8" = 1'-0"

8 0 8 16

E1.1

DGS# - CC-09-MC99-31

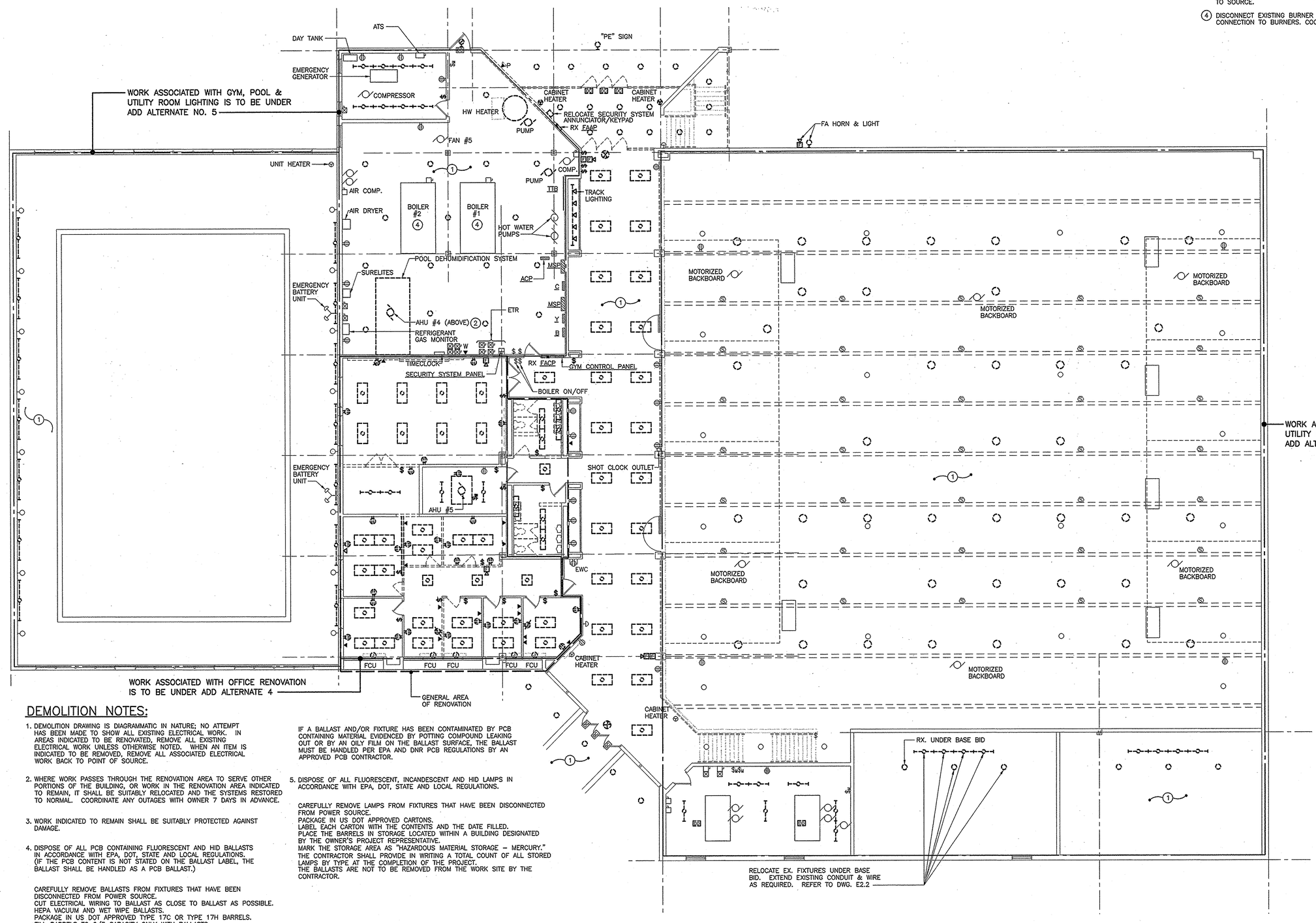

DRAWING NOTES:

1. REMOVE FIXTURES ONLY. EX. CONDUIT & WIRING TO REMAIN FOR RECONNECTION TO NEW. REFER TO DRAWING E2.2.
2. REMOVE UNDER ADD ALTERNATE 4.
3. REMOVE FIXTRUES ONLY. EX CONDUIT AND WIRING TO ACCESSIBLE POINT INSIDE BUILDING SHALL REMAIN FOR RECONNECTION TO NEW CIRCUIT (REFER TO DWG. E2.2). REMOVE REMAINING BRANCH CIRCUIT TO SOURCE.
4. DISCONNECT EXISTING BURNER SECTION ONLY. RETAIN CIRCUITS FOR CONNECTION TO BURNERS. COORDINATE WITH MECHANICAL DIVISION.

DEMOLITION NOTES:

1. DEMOLITION DRAWING IS DIAGRAMMATIC IN NATURE; NO ATTEMPT HAS BEEN MADE TO SHOW ALL EXISTING ELECTRICAL WORK. IN AREAS INDICATED TO BE RENOVATED, REMOVE ALL EXISTING ELECTRICAL WORK UNLESS OTHERWISE NOTED. WHEN AN ITEM IS INDICATED TO BE REMOVED, REMOVE ALL ASSOCIATED ELECTRICAL WORK BACK TO POINT OF SOURCE.
2. WHERE WORK PASSES THROUGH THE RENOVATION AREA TO SERVE OTHER PORTIONS OF THE BUILDING, OR WORK IN THE RENOVATION AREA INDICATED TO REMAIN, IT SHALL BE SUITABLY RELOCATED AND THE SYSTEMS RESTORED TO NORMAL. COORDINATE ANY OUTAGES WITH OWNER 7 DAYS IN ADVANCE.
3. WORK INDICATED TO REMAIN SHALL BE SUITABLY PROTECTED AGAINST DAMAGE.
4. DISPOSE OF ALL PCB CONTAINING FLUORESCENT AND HID BALLASTS IN ACCORDANCE WITH EPA, DOT, STATE AND LOCAL REGULATIONS. (IF THE PCB CONTENT IS NOT STATED ON THE BALLAST LABEL, THE BALLAST SHALL BE HANDLED AS A PCB BALLAST.)

   CAREFULLY REMOVE BALLASTS FROM FIXTURES THAT HAVE BEEN DISCONNECTED FROM POWER SOURCE.
   CUT ELECTRICAL WIRING TO BALLAST AS CLOSE TO BALLAST AS POSSIBLE.
   HEPA VACUUM AND WET WIPE BALLASTS.
   PACKAGE IN US DOT APPROVED TYPE 17C OR TYPE 17H BARRELS.
   FILL BARRELS TO 2/3 CAPACITY ONLY WITH BALLASTS.
   INSTALL GASKET ON LID, APPLY LOCK RING, AND SEAL.
   APPLY EPA-APPROVED PCB LABELS TO THE BARRELS, INCLUDING THE DATE INDICATING WHEN WASTE WAS FIRST ADDED TO BARREL.
   PLACE THE BARRELS IN STORAGE LOCATED WITHIN A BUILDING DESIGNATED BY THE OWNER'S PROJECT REPRESENTATIVE. DO NOT PLACE BARRELS OUTSIDE EXPOSED TO WEATHER. PROVIDE APPROVED PCB-ABSORBENT MATERIALS IMMEDIATELY ADJACENT TO THE BARREL STORAGE AREA. DO NOT PLACE LOOSE ABSORBENT MATERIAL IN THE DRUMS.
   MARK THE BARREL STORAGE AREA WITH SIGNS, MARKS AND LINES PER CODE REGULATIONS.
   THE CONTRACTOR SHALL PROVIDE IN WRITING A TOTAL BALLAST COUNT, OR THEIR TOTAL WEIGHT BY BARREL, INCLUDING THE STORAGE LOCATION. THE BALLASTS ARE NOT TO BE REMOVED FROM THE WORK SITE BY THE CONTRACTOR.

   IF A BALLAST AND/OR FIXTURE HAS BEEN CONTAMINATED BY PCB CONTAINING MATERIAL EVIDENCED BY POTTING COMPOUND LEAKING OUT OR BY AN OILY FILM ON THE BALLAST SURFACE, THE BALLAST MUST BE HANDLED PER EPA AND DNR PCB REGULATIONS BY AN APPROVED PCB CONTRACTOR.
5. DISPOSE OF ALL FLUORESCENT, INCANDESCENT AND HID LAMPS IN ACCORDANCE WITH EPA, DOT, STATE AND LOCAL REGULATIONS.

   CAREFULLY REMOVE LAMPS FROM FIXTURES THAT HAVE BEEN DISCONNECTED FROM POWER SOURCE.
   PACKAGE IN US DOT APPROVED CARTONS.
   LABEL EACH CARTON WITH THE CONTENTS AND THE DATE FILLED.
   PLACE THE BARRELS IN STORAGE LOCATED WITHIN A BUILDING DESIGNATED BY THE OWNER'S PROJECT REPRESENTATIVE.
   MARK THE STORAGE AREA AS "HAZARDOUS MATERIAL STORAGE - MERCURY."
   THE CONTRACTOR SHALL PROVIDE IN WRITING A TOTAL COUNT OF ALL STORED LAMPS BY TYPE AT THE COMPLETION OF THE PROJECT.
   THE BALLASTS ARE NOT TO BE REMOVED FROM THE WORK SITE BY THE CONTRACTOR.

SECOND FLOOR PLAN - ELECTRICAL DEMOLITION

SCALE: 1/8" = 1'-0"

college of southern maryland

Gipe Associates Inc.
Consulting Engineers
Baltimore, Maryland
Easton, Maryland
GAI WO# 01044

"THIS DRAWING AND THE DESIGN AND CONSTRUCTION FEATURES DISCLOSED ARE PROPRIETARY TO GIPE ASSOCIATES, INC. AND SHALL NOT BE ALTERED OR REUSED IN WHOLE OR IN PART WITHOUT THE EXPRESS WRITTEN PERMISSION OF GIPE ASSOCIATES, INC. Copyright © 2001"

1355 Beverly Rd.
Suite 105
McLean VA 22101
703.903.9100
703.903.9755 Fax

Grimm and Parker Architects

SECOND FLOOR PLAN
ELECTRICAL DEMOLITION
COLLEGE OF SOUTHERN MARYLAND WELLNESS CENTER
LA PLATA, MARYLAND

DATE	DESCRIPTION
12-12-01	DD SUBMITTAL
2-8-02	DGS SUBMISSION
4-11-02	BID SET
4-30-03	BID SET

© GRIMM AND PARKER, P.C. 2001

RECEIVED JUN 17 2005

RECEIVED OCT 25 2004 GIPE ASSOC.

SCALE: 1/8" = 1'-0"

PROJECT RECORD DRAWINGS

E1.2

DGS# - CC-09-MC99-311

DEMOLITION NOTES:

1. DEMOLITION DRAWING IS DIAGRAMMATIC IN NATURE; NO ATTEMPT HAS BEEN MADE TO SHOW ALL EXISTING ELECTRICAL WORK. IN AREAS INDICATED TO BE RENOVATED, REMOVE ALL EXISTING ELECTRICAL WORK UNLESS OTHERWISE NOTED. WHEN AN ITEM IS INDICATED TO BE REMOVED, REMOVE ALL ASSOCIATED ELECTRICAL WORK BACK TO POINT OF SOURCE.

2. WHERE WORK PASSES THROUGH THE RENOVATION AREA TO SERVE OTHER PORTIONS OF THE BUILDING, OR WORK IN THE RENOVATION AREA INDICATED TO REMAIN, IT SHALL BE SUITABLY RELOCATED AND THE SYSTEMS RESTORED TO NORMAL. COORDINATE ANY OUTAGES WITH OWNER 7 DAYS IN ADVANCE.

3. WORK INDICATED TO REMAIN SHALL BE SUITABLY PROTECTED AGAINST DAMAGE.

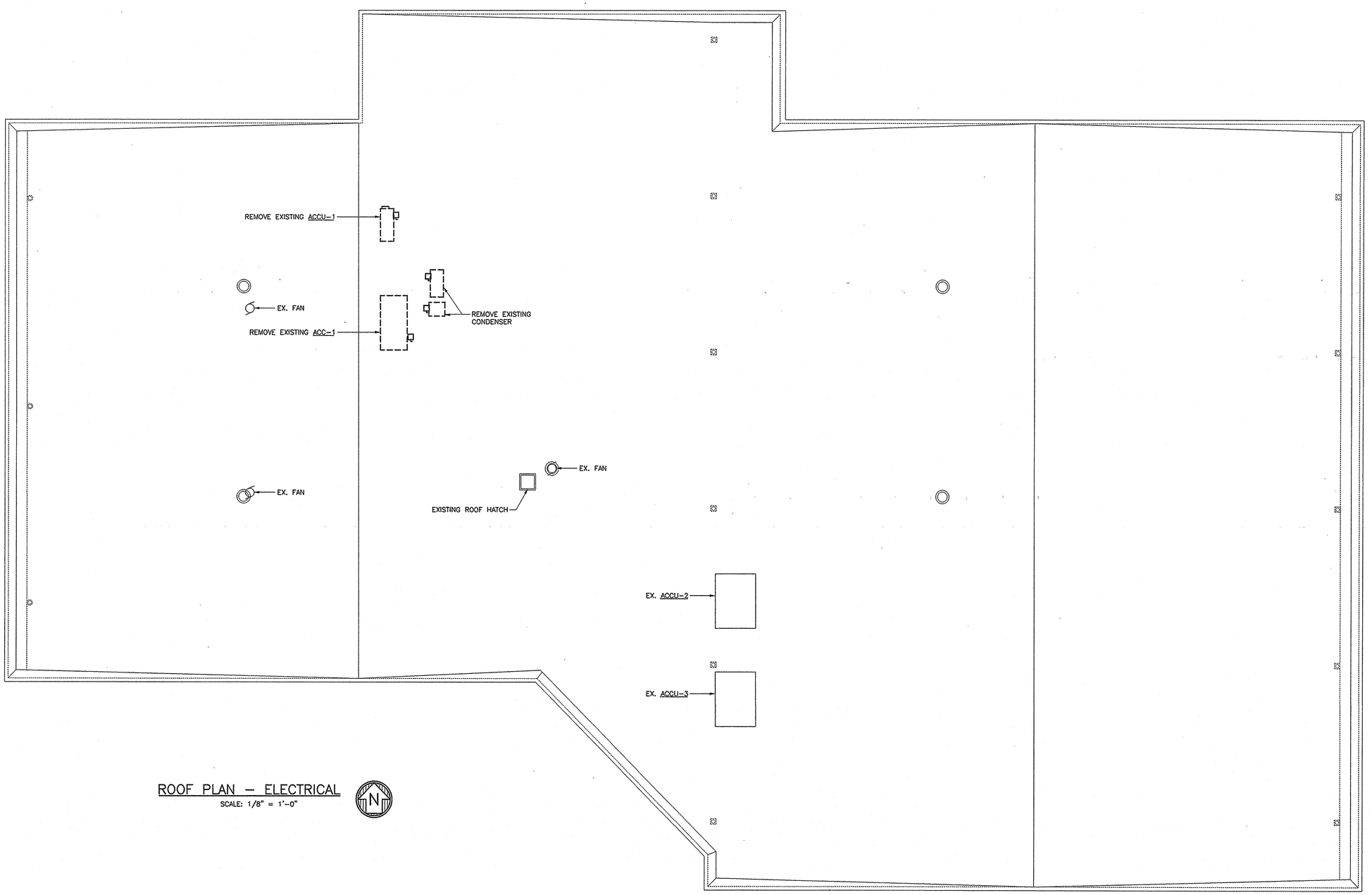

ROOF PLAN – ELECTRICAL
SCALE: 1/8" = 1'-0"

Gipe Associates Inc.
Consulting Engineers
Baltimore, Maryland
Easton, Maryland
GAI WO# 01044

"THIS DRAWING AND THE DESIGN AND CONSTRUCTION FEATURES DISCLOSED ARE PROPRIETARY TO GIPE ASSOCIATES, INC. AND SHALL NOT BE ALTERED OR REUSED IN WHOLE OR IN PART WITHOUT THE EXPRESS WRITTEN PERMISSION OF GIPE ASSOCIATES, INC. Copyright © 2001"

1355 Beverly Rd.
Suite 105
McLean VA 22101
703.903.9100
703.903.9755 Fax

Grimm and Parker Architects

ROOF PLAN
DEMOLITION
COLLEGE OF SOUTHERN MARYLAND WELLNESS CENTER
LA PLATA, MARYLAND

DATE	DESCRIPTION
12-12-01	DD SUBMITTAL
2-8-02	DGS SUBMISSION
4-11-02	BID SET
4/30/03	Bid Set

© GRIMM AND PARKER,P.C. 2001

RECEIVED
JUN 17 2005

RECEIVED
OCT 25 2004

PROJECT RECORD DRAWINGS

SCALE: 1/8" = 1'-0"

8 0 8 16

E1.3

DGS# - CC-09-MC99-311

DRAWING NOTES:

1. CONNECT NEW FIXTURES IN THIS AREA TO EXISTING BRANCH CIRCUITS AS REQUIRED.
2. TO SPARE 1P-20A-CB IN EXISTING PANEL X.
3. TO SPARE 1P-15A-CB IN EXISTING PANEL E.
4. MOUNT CONCEALED INSIDE BUILDING. DO NOT INSTALL EXPOSED ON BUILDING EXTERIOR.
5. 2 #10 & 1 #10 GW - 3/4" (DIRECT BURIED) RGS CONDUIT.
6. FIXTURES RELOCATED UNDER BASE BID, NEW UNDER ADD ALTERNATE NO. 5.
7. BATTERY UNIT FOR REMOTE EMERGENCY HEADS. MOUNT ABOVE CEILING OR 10'-0" AFF IN AREAS WITH NO CEILING.
8. MAKE CONNECTION TO "UNSWITCHED" (LINE SIDE OF CONTROLS) 277V LIGHTING CIRCUIT SERVING EXTERIOR LIGHTING FIXTURES AS REQUIRED.
9. MAKE CONNECTION TO 277V EMERGENCY EGRESS LIGHTING AND EXIT SIGN CIRCUITS SERVING THIS FLOOR AS REQUIRED.

REFER TO DWG. E2.2 FOR CONTINUATION

WORK ASSOCIATED WITH GYM, POOL & UTILITY ROOM LIGHTING IS TO BE UNDER ADD ALTERNATE NO. 5

(SEE DWG. E2.2 FOR LIGHTING IN THIS AREA)

MAKE CONNECTION TO RECEPTACLE CKT IN THIS AREA. REFER TO DWG. E3.1 FOR CONTINUATION

2 #10 + #10GW - 3/4" C. (4)

MAKE CONNECTION TO EX. EXTERIOR LIGHTING CKT. AS REQUIRED

EX. PNL E

EX. PNL X

EX. PNL P

EX. PNL A

EX. PNL Q

MAKE CONNECTION TO UNSWITCHED 277V LIGHTING CIRCUIT IN THIS AREA AS REQUIRED.

MAKE CONNECTION TO NEAREST EXISTING 277V EMERGENCY LIGHTING AS REQUIRED

NEW LOCATION OF EXISTING EMERGENCY LIGHTING UNIT. MOUNT 10'-0" AFF. REFER TO DWG E1.1

FIRST FLOOR PLAN - LIGHTING

SCALE: 1/8" = 1'-0"

College of Southern Maryland

Gipe Associates Inc.
Consulting Engineers
Baltimore, Maryland
Easton, Maryland
GAI WO# 01044

"THIS DRAWING AND THE DESIGN AND CONSTRUCTIONS FEATURES DISCLOSED ARE PROPRIETARY TO GIPE ASSOCIATES, INC. AND SHALL NOT BE ALTERED OR REUSED IN WHOLE OR IN PART WITHOUT THE EXPRESS WRITTEN PERMISSION OF GIPE ASSOCIATES, INC. Copyright © 2001"

1355 Beverly Rd.
Suite 105
McLean VA 22101
703.903.9100
703.903.9755 Fax

Grimm and Parker Architects

FIRST FLOOR PLAN
LIGHTING
COLLEGE OF SOUTHERN MARYLAND WELLNESS CENTER
LA PLATA, MARYLAND

DATE	DESCRIPTION
12-12-01	DD SUBMITTAL
2-8-02	DGS SUBMISSION
4-11-02	BID SET
4-30-03	BID SET

©GRIMM AND PARKER,P.C. 2001

RECEIVED JUN 17 2005 DGS

RECEIVED OCT 25 2004

PROJECT RECORD DRAWINGS

SCALE: 1/8" = 1'-0"

8 0 8 16

E2.1

DGS# - CC-09-MC99-311

DRAWING NOTES:

1. CONNECT NEW FIXTURES IN THIS AREA TO EXISTING BRANCH CIRCUITS AS REQUIRED.
2. TO SPARE 1P–20A–CB IN EXISTING PANEL Y.
3. EXTEND EX. BRANCH CIRCUIT AS REQUIRED.
4. PROVIDE SIX (6) 1P–20A–CB'S IN EXISTING SPACES. NEW CB'S SHALL MATCH EXISTING. PANEL IS GENERAL ELECTRIC NHB, STYLE 2, 100A MLO, 480/277V., 3ø, 4W.
5. TO SPARE 1P–20A–CB IN EXISTING PANEL X. PROVIDE CONNECTION TO EXISTING EXTERIOR LIGHTING CONTROLS AS REQUIRED. PROVIDE ADDITIONAL CONTACTOR & CONTROL WIRING AS REQUIRED.
6. MAKE CONNECTION TO EX. 277V EMERGENCY EGRESS & EXIT LIGHT CIRCUITS SERVING THIS FLOOR AS REQUIRED.
7. TO SPARE 1P–20A–CB IN EXISTING PANEL E VIA PHOTOCELL.

REFER TO DWG. E2.1 FOR CONTINUATION

TO SPARE 1P–20A–CB IN PANEL "X" LOCATED ON FIRST FLOOR

"PE" BUILDING SIGN – MOUNT TOP 24" BELOW ROOF LINE. EXTEND EX. BRANCH CIRCUIT AS REQ'D

WORK ASSOCIATED WITH CONCESSIONS IS TO BE UNDER ADD ALTERNATE 1

MOUNT CONCEALED INSIDE BLDG. DO NOT MOUNT EXPOSED ON BLDG. EXTERIOR

PROVIDE (1) TYPE "G" FIXTURE CONNECTED TO BOILER ROOM CIRCUIT IN THIS AREA IF ALTERNATE 1 IS NOT ACCEPTED

FIELD COORDINATE LOCATION OF FIXTURES WITH DUCTWORK AND EQUIPMENT

PHOTOCELL – MOUNT 12" BELOW ROOF LINE

PROVIDE UNDER BASE BID

WORK ASSOCIATED WITH GYM, POOL & UTILITY ROOM LIGHTING IS TO BE UNDER ADD ALTERNATE NO. 5

REFER TO DWG. E2.1 FOR CONTINUATION

WORK ASSOCIATED WITH GYM, POOL & UTILITY ROOM LIGHTING IS TO BE UNDER ADD ALTERNATE NO. 5

WORK ASSOCIATED WITH OFFICE RENOVATION IS TO BE UNDER ADD ALTERNATE 4

RECONNECT EXISTING EXTERIOR LIGHTING CIRCUIT TO NEW AS REQUIRED

RELOCATE EX. FIXTURES AND EXTEND ASSOCIATED BRANCH CIRCUIT CONDUIT & WIRING AS REQUIRED UNDER BASE BID. PROVIDE NEW FIXTURES INDICATED UNDER ADD ALTERNATE NO. 5

GENERATOR 204 · CONCESSIONS 202 · LOBBY 201 · REMOTE ENTRY · REMOTE BUZZER · ELEV. · STAIR S-1 · MECHANICAL 203 · MECH 203A · CORRIDOR 022 · CORRIDOR 021 · SHARED OFFICE 205 · SMALL CLASSROOM 205 · MEN 206 · WOMEN 206 · CUSTODIAN 208 · VEST. 218 · OFFICE 217 · MAIL 215 · SHARED OFFICE 216 · AQUA. MGR. 214 · VEST. 209 · OFFICE MANAGER 210 · AQUA. DIR. 213 · COORD. 212 · FACILITY MANAGER 211 · STAIR S-2 · MECHANICAL 220 · OPEN TO BELOW · EBU

SECOND FLOOR PLAN – LIGHTING

SCALE: 1/8" = 1'–0"

SCALE: 1/8" = 1'–0"

PROJECT RECORD DRAWINGS

college of southern maryland

Gipe Associates Inc.
Consulting Engineers
Baltimore, Maryland
Easton, Maryland

GAI WO# 01044

"THIS DRAWING AND THE DESIGN AND CONSTRUCTION FEATURES DISCLOSED ARE PROPRIETARY TO GIPE ASSOCIATES, INC. AND SHALL NOT BE ALTERED OR REUSED IN WHOLE OR IN PART WITHOUT THE EXPRESS WRITTEN PERMISSION OF GIPE ASSOCIATES, INC. Copyright © 2001"

1355 Beverly Rd.
Suite 105
McLean VA 22101
703.903.9100
703.903.9755 Fax

Grimm and Parker Architects

SECOND FLOOR PLAN
LIGHTING
COLLEGE OF SOUTHERN MARYLAND WELLNESS CENTER
LA PLATA, MARYLAND

DATE	DESCRIPTION
12-12-01	DD SUBMITTAL
2-8-02	DGS SUBMISSION
4-11-02	BID SET
4-30-03	BID SET

© GRIMM AND PARKER,P.C. 2001

E2.2

DGS# - CC-09-MC

RECEIVED JUN 17 2003

RECEIVED OCT 25 2004

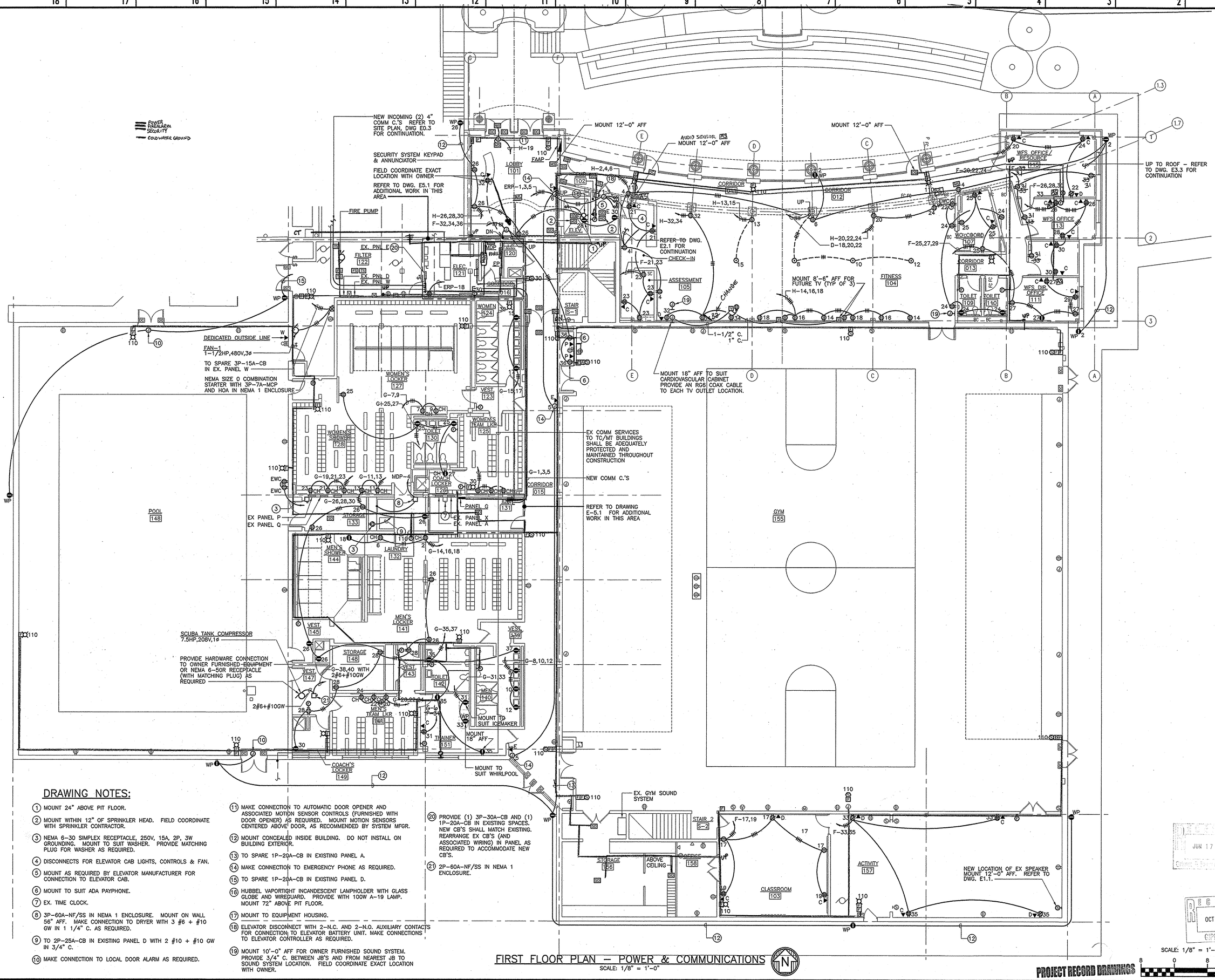

DRAWING NOTES:

1. MOUNT 24" ABOVE PIT FLOOR.
2. MOUNT WITHIN 12" OF SPRINKLER HEAD. FIELD COORDINATE WITH SPRINKLER CONTRACTOR.
3. NEMA 6-30 SIMPLEX RECEPTACLE, 250V, 15A, 2P, 3W GROUNDING. MOUNT TO SUIT WASHER. PROVIDE MATCHING PLUG FOR WASHER AS REQUIRED.
4. DISCONNECTS FOR ELEVATOR CAB LIGHTS, CONTROLS & FAN.
5. MOUNT AS REQUIRED BY ELEVATOR MANUFACTURER FOR CONNECTION TO ELEVATOR CAB.
6. MOUNT TO SUIT ADA PAYPHONE.
7. EX. TIME CLOCK.
8. 3P-60A-NF/SS IN NEMA 1 ENCLOSURE. MOUNT ON WALL 56" AFF. MAKE CONNECTION TO DRYER WITH 3 #6 + #10 GW IN 1 1/4" C. AS REQUIRED.
9. TO 2P-25A-CB IN EXISTING PANEL D WITH 2 #10 + #10 GW IN 3/4" C.
10. MAKE CONNECTION TO LOCAL DOOR ALARM AS REQUIRED.
11. MAKE CONNECTION TO AUTOMATIC DOOR OPENER AND ASSOCIATED MOTION SENSOR CONTROLS (FURNISHED WITH DOOR OPENER) AS REQUIRED. MOUNT MOTION SENSORS CENTERED ABOVE DOOR, AS RECOMMENDED BY SYSTEM MFGR.
12. MOUNT CONCEALED INSIDE BUILDING. DO NOT INSTALL ON BUILDING EXTERIOR.
13. TO SPARE 1P-20A-CB IN EXISTING PANEL A.
14. MAKE CONNECTION TO EMERGENCY PHONE AS REQUIRED.
15. TO SPARE 1P-20A-CB IN EXISTING PANEL D.
16. HUBBEL VAPORTIGHT INCANDESCENT LAMPHOLDER WITH GLASS GLOBE AND WIREGUARD. PROVIDE WITH 100W A-19 LAMP. MOUNT 72" ABOVE PIT FLOOR.
17. MOUNT TO EQUIPMENT HOUSING.
18. ELEVATOR DISCONNECT WITH 2-N.C. AND 2-N.O. AUXILIARY CONTACTS FOR CONNECTION TO ELEVATOR BATTERY UNIT. MAKE CONNECTIONS TO ELEVATOR CONTROLLER AS REQUIRED.
19. MOUNT 10'-0" AFF FOR OWNER FURNISHED SOUND SYSTEM. PROVIDE 3/4" C. BETWEEN JB'S AND FROM NEAREST JB TO SOUND SYSTEM LOCATION. FIELD COORDINATE EXACT LOCATION WITH OWNER.
20. PROVIDE (1) 3P-30A-CB AND (1) 1P-20A-CB IN EXISTING SPACES. NEW CB'S SHALL MATCH EXISTING. REARRANGE EX CB'S (AND ASSOCIATED WIRING) IN PANEL AS REQUIRED TO ACCOMMODATE NEW CB'S.
21. 2P-60A-NF/SS IN NEMA 1 ENCLOSURE.

FIRST FLOOR PLAN – POWER & COMMUNICATIONS
SCALE: 1/8" = 1'-0"

SCALE: 1/8" = 1'-0"

PROJECT RECORD DRAWINGS

College of Southern Maryland

Gipe Associates Inc.
Consulting Engineers
Baltimore, Maryland
Easton, Maryland
GAI WO# 01044

"THIS DRAWING AND THE DESIGN AND CONSTRUCTION FEATURES DISCLOSED ARE PROPRIETARY TO GIPE ASSOCIATES, INC. AND SHALL NOT BE ALTERED OR REUSED IN WHOLE OR IN PART WITHOUT THE EXPRESS WRITTEN PERMISSION OF GIPE ASSOCIATES, INC. Copyright © 2001"

1355 Beverly Rd.
Suite 105
McLean VA 22101
703.903.9100
703.903.9755 Fax

Grimm and Parker Architects

FIRST FLOOR PLAN
POWER & COMMUNICATIONS
COLLEGE OF SOUTHERN MARYLAND WELLNESS CENTER
LA PLATA, MARYLAND

DATE	DESCRIPTION
12-12-01	DD SUBMITTAL
2-8-02	DGS SUBMISSION
4-11-02	BID SET
4-30-03	BID SET

© GRIMM AND PARKER,P.C. 2001

RECEIVED JUN 17 2005 COMPLIANCE

RECEIVED OCT 25 2004 GIPE ASSOC.

E3.1

DGS# - CC-09-MC99-311

Gipe Associates, Inc.
CONSULTING ENGINEERS

RESPOND TO:
BALTIMORE■
EASTON□

SHOP DRAWING COMMENTS

W.O.#01044

College of Southern Maryland – Wellness Center (P.E. Building)
Shop Drawing No. E-22: Electrical Testing – Voice/Data/Fiber Test Results
Voice/Data/Fiber Record Drawings & Electrical O & M Manual (Revised)

- ■ REVIEWED
- □ COMMENTS NOTED
- □ REJECTED
- □ REVISE AND RESUBMIT
- □ RESUBMIT AS SPECIFIED
- □ RESUBMIT FOR RECORD ONLY
- □ FOR INFORMATION ONLY/NOT REVIEWED

This review is only for general conformance with the design concept of the project and general compliance with the information given in the Contract Documents and does not include review of quantities, dimensions, weights or gauges, fabrication processes, sequence of work, construction methods, coordination with the work of other trades, or construction safety precautions all of which are the responsibility of the Contractor. Corrections or comments made on or attached to the shop drawings (or the absence of corrections and comments) during this review in no way relieves the Contractor from complying with the requirements of the Contract Drawings.

Engineer's Comments:

No comments.

Processed by: JFK Date: 05/19/05

P:\JOBS\2001\01044\Shop Drawing Comments\E-22 Electrical Testing Results & O & M Manual.doc

Page 1 of 1

Baltimore
849 Fairmount Avenue, Suite 102
Baltimore, Maryland 21286
410-832-2420 TEL
410-832-2418 FAX

Easton
8659 Commerce Drive, PO Box 1147
Easton, Maryland 21601
410-822-8688 TEL
410-822-6306 FAX

TO EQUIPMENT HOUSING.

OR DISCONNECT WITH 2–N.C. AND 2–N.O. AUXILIARY CONTACTS ONNECTION TO ELEVATOR BATTERY UNIT. MAKE CONNECTIONS VATOR CONTROLLER AS REQUIRED.

10'–0" AFF FOR OWNER FURNISHED SOUND SYSTEM. E 3/4" C. BETWEEN JB'S AND FROM NEAREST JB TO SYSTEM LOCATION. FIELD COORDINATE EXACT LOCATION OWNER.

E (1) 3P–30A–CB AND (1) A–CB IN EXISTING SPACES. B'S SHALL MATCH EXISTING. ANGE EX CB'S (AND JATED WIRING) IN PANEL AS RED TO ACCOMMODATE NEW

A–NF/SS IN NEMA 1 SURE.

1 FEED TO 2nd FLOOR

NEW INCOMING (2) 4" COMM C.'S REFER TO SITE PLAN, DWG E0.3 FOR CONTINUATION.

SECURITY SYSTEM KEYPAD & ANNUNCIATOR

FIELD COORDINATE EXACT LOCATION WITH OWNER

REFER TO DWG. E5.1 FOR ADDITIONAL WORK IN THIS AREA

DEDICATED OUTSIDE LINE

FAN–1
1–1/2HP,480V,3ø

TO SPARE 3P–15A–CB IN EX. PANEL W

NEMA SIZE 0 COMBINATION STARTER WITH 3P–7A–MCP AND HOA IN NEMA 1 ENCLOSURE

EX COMM SERVICES TO TC/MT BUILDINGS SHALL BE ADEQUATELY PROTECTED AND MAINTAINED THROUGHOUT CONSTRUCTION

NEW COMM C.'S

REFER TO DRAWING E–5.1 FOR ADDITIONAL WORK IN THIS AREA

SCUBA TANK COMPRESSOR
7.5HP,208V,1ø

PROVIDE HARDWARE CONNECTION TO OWNER FURNISHED EQUIPMENT OR NEMA 6–50R RECEPTACLE (WITH MATCHING PLUG) AS REQUIRED

2#6+#10GW

RG–11 QUAD SHIELD CMP

MOUNT TO SUIT ICEMAKER

MOUNT TO SUIT WHIRLPOOL

MOUNT 18" AFF TO SUIT CARDIOVASCULAR CABINET PROVIDE AN RG6 COAX CABLE TO EACH TV OUTLET LOCATION.

MOUNT 8'–6" AFF FOR FUTURE TV (TYP OF 3)

UP TO ROOF – REFER TO DWG. E3.3 FOR CONTINUATION

NEW LOCATION OF EX SPEAKER MOUNT 12'–0" AFF. REFER TO DWG. E1.1.

FIRST FLOOR PLAN – POWER & COMMUNICATIONS
SCALE: 1/8" = 1'–0"

SCALE: 1/8" = 1'–0"
8 0 8 16

Firm Name and Address	PROJECT TITLE	Revisions			Project	Network Wiring Plan	
FIBERPLUS 8240 PRESTON COURT, SUITE C JESSUP, MD 20794 Tel: (301) 317-3300 Fax: (301) 317-8585 www.fiberplusinc.com	COLLEGE OF SOUTHERN MD WELLNESS CENTER	NO.	DATE	Description	Sales Engineer	Will Ruffin	
		1		As–Builts	Sales Engineer's E–mail	Wruffin@fiberplusinc.com	
		2			Sales Engineer's Extension	150	Sheet
					Scale	1/8"=1'–00"	N–1
					Date	4/1/05	
					Drawn By	D.Khup	

college of southern maryland

Gipe Associates Inc.
Consulting Engineers
Baltimore, Maryland
Easton, Maryland
GAI WO# 01044

"THIS DRAWING AND THE DESIGN AND CONSTRUCTION FEATURES DISCLOSED ARE PROPRIETARY AND SHALL NOT BE ALTERED OR REUSED IN WHOLE OR IN PART WITHOUT THE EXPRESS WRITTEN PERMISSION OF GIPE ASSOCIATES, INC. Copyright © 2001"

1355 Beverly Rd.
Suite 105
McLean VA 22101
703.903.9100
703.903.9755 Fax

Grimm and Parker Architects

FIRST FLOOR PLAN
POWER & COMMUNICATIONS
COLLEGE OF SOUTHERN MARYLAND WELLNESS CENTER
LA PLATA, MARYLAND

RECEIVED
MAY 10 2005
GIPE ASSOC.

DATE	DESCRIPTION
12-12-01	DD SUBMITTAL
2-8-02	DGS SUBMISSION
4-11-02	BID SET
4-30-03	BID SET

© GRIMM AND PARKER,P.C. 2001

E3.1

DGS# – CC–09–MC99–311

PROJECT RECORD DRAWINGS

DRAWING NOTES:

1. MOUNT 24" ABOVE PIT FLOOR.
2. MOUNT WITHIN 12" OF SPRINKLER HEAD. FIELD COORDINATE WITH SPRINKLER CONTRACTOR.
3. NEMA 6-30 SIMPLEX RECEPTACLE, 250V, 15A, 2P, 3W GROUNDING. MOUNT TO SUIT WASHER. PROVIDE MATCHING PLUG FOR WASHER AS REQUIRED.
4. DISCONNECTS FOR ELEVATOR CAB LIGHTS, CONTROLS & FAN.
5. MOUNT AS REQUIRED BY ELEVATOR MANUFACTURER FOR CONNECTION TO ELEVATOR CAB.
6. MOUNT TO SUIT ADA PAYPHONE.
7. EX. TIME CLOCK.
8. 3P-60A-NF/SS IN NEMA 1 ENCLOSURE. MOUNT ON WALL 56" AFF. MAKE CONNECTION TO DRYER WITH 3 #6 + #10 GW IN 1 1/4" C. AS REQUIRED.
9. TO 2P-25A-CB IN EXISTING PANEL D WITH 2 #10 + #10 GW IN 3/4" C.
10. MAKE CONNECTION TO LOCAL DOOR ALARM AS REQUIRED.
11. MAKE CONNECTION TO AUTOMATIC DOOR OPENER AND ASSOCIATED MOTION SENSOR CONTROLS (FURNISHED WITH DOOR OPENER) AS REQUIRED. MOUNT MOTION SENSORS CENTERED ABOVE DOOR, AS RECOMMENDED BY SYSTEM MFGR.
12. MOUNT CONCEALED INSIDE BUILDING. DO NOT INSTALL ON BUILDING EXTERIOR.
13. TO SPARE 1P-20A-CB IN EXISTING PANEL A.
14. MAKE CONNECTION TO EMERGENCY PHONE AS REQUIRED.
15. TO SPARE 1P-20A-CB IN EXISTING PANEL D.
16. HUBBEL VAPORTIGHT INCANDESCENT LAMPHOLDER WITH GLASS GLOBE AND WIREGUARD. PROVIDE WITH 100W A-19 LAMP. MOUNT 72" ABOVE PIT FLOOR.
17. MOUNT TO EQUIPMENT HOUSING.
18. ELEVATOR DISCONNECT WITH 2-N.C. AND 2-N.O. AUXILIARY CONTACTS FOR CONNECTION TO ELEVATOR BATTERY UNIT. MAKE CONNECTIONS TO ELEVATOR CONTROLLER AS REQUIRED.
19. MOUNT 10'-0" AFF FOR OWNER FURNISHED SOUND SYSTEM. PROVIDE 3/4" C. BETWEEN JB'S AND FROM NEAREST JB TO SOUND SYSTEM LOCATION. FIELD COORDINATE EXACT LOCATION WITH OWNER.
20. PROVIDE (1) 3P-30A-CB AND (1) 1P-20A-CB IN EXISTING SPACES. NEW CB'S SHALL MATCH EXISTING. REARRANGE EX CB'S (AND ASSOCIATED WIRING) IN PANEL AS REQUIRED TO ACCOMMODATE NEW CB'S.
21. 2P-60A-NF/SS IN NEMA 1 ENCLOSURE.
22. RG-11 FEED TO 2nd FLOOR

NEW INCOMING (2) 4" COMM C.'S REFER TO SITE PLAN, DWG E0.3 FOR CONTINUATION.
SECURITY SYSTEM KEYPAD & ANNUNCIATOR
FIELD COORDINATE EXACT LOCATION WITH OWNER
REFER TO DWG. E5.1 FOR ADDITIONAL WORK IN THIS AREA
FIRE PUMP
DEDICATED OUTSIDE LINE
FAN-1 1-1/2HP,480V,3ø
TO SPARE 3P-15A-CB IN EX. PANEL W
NEMA SIZE 0 COMBINATION STARTER WITH 3P-7A-MCP AND HOA IN NEMA 1 ENCLOSURE
SCUBA TANK COMPRESSOR 7.5HP,208V,1ø
PROVIDE HARDWARE CONNECTION TO OWNER FURNISHED EQUIPMENT OR NEMA 6-50R RECEPTACLE (WITH MATCHING PLUG) AS REQUIRED
2#6+#10GW
EX PANEL P
EX PANEL Q
EX. PANEL X
EX. PANEL Y
EX. PANEL A
EX COMM SERVICES TO TC/MT BUILDINGS SHALL BE ADEQUATELY PROTECTED AND MAINTAINED THROUGHOUT CONSTRUCTION
NEW COMM C.'S
REFER TO DRAWING E-5.1 FOR ADDITIONAL WORK IN THIS AREA
RG-11 QUAD SHIELD CMP
MOUNT TO SUIT ICEMAKER
MOUNT 18" AFF
MOUNT TO SUIT WHIRLPOOL
MOUNT 12'-0" AFF
MOUNT 18" AFF TO SUIT CARDIOVASCULAR CABINET PROVIDE AN RG6 COAX CABLE TO EACH TV OUTLET LOCATION.
MOUNT 8'-6" AFF FOR FUTURE TV (TYP OF 3)
UP TO ROOF - REFER TO DWG. E3.3 FOR CONTINUATION
REFER TO DWG. E2.1 FOR CONTINUATION
EX. GYM SOUND SYSTEM
NEW LOCATION OF EX SPEAKER MOUNT 12'-0" AFF. REFER TO DWG. E1.1.

LOBBY 101 · ENTR 102 · CORRIDOR 011 · CORRIDOR 012 · ELEV. · ELEC. 121 · MDP 120 · FILTER 122 · CORRIDOR 016 · WOMEN 124 · STAIR S-1 · ASSESSMENT 105 · CHECK-IN · FITNESS 104 · WFS OFFICE/ RESOURCE 115 · WFS OFFICE 113 · WC COORD 109 · CORRIDOR 013 · TOILET 110 · WFS DIR OFFICE 111 · WOMEN'S LOCKERS 127 · VEST. 123 · WOMEN'S SHOWER 128 · WOMEN'S TEAM LKR 125 · TOILET 130 · COACH LOCKER 126 · CORRIDOR 015 · IDF E 131 · POOL 148 · STORAGE 133 · MEN'S SHOWER 144 · LAUNDRY 132 · MEN'S LOCKER 141 · VEST. 145 · VEST. 139 · STORAGE 148 · VEST. 147 · VEST. 143 · TOILET 142 · MEN 140 · MEN'S TEAM LKR 141 · COACH'S LOCKER 149 · TRAINER 151 · GYM 155 · STAIR 2 S-2 · STORAGE 156 · ABOVE CEILING · OFFICE 158 · CLASSROOM 103 · ACTIVITY 157

FIRST FLOOR PLAN - POWER & COMMUNICATIONS

SCALE: 1/8" = 1'-0"

PROJECT RECORD DRAWINGS

SCALE: 1/8" = 1'-0"

8 0 8 16

First Name and Address	PROJECT TITLE	Revisions			Project Network Wiring Plan
FIBERPLUS 8240 PRESTON COURT, SUITE C JESSUP, MD 20794 Tel: (301) 317-3300 Fax: (301) 317-8585 www.fiberplusinc.com	COLLEGE OF SOUTHERN MD WELLNESS CENTER	NO.	DATE	Description	Sales Engineer Will Puffin
		1		As-Builts	Sales Engineer's E-mail wpuffin@fiberplusinc.com
		2			Sales Engineer's Extension 150
					Scale 1/8"=1'-00"
					Date 4/1/05
					Drawn By DJKhup

Sheet N-1

CSM college of southern maryland

Gipe Associates Inc.
Consulting Engineers
Baltimore, Maryland
Easton, Maryland

GAI WO# 01044

"THIS DRAWING AND THE DESIGN AND CONSTRUCTION FEATURES DISCLOSED ARE PROPRIETARY TO GIPE ASSOCIATES, INC. AND SHALL NOT BE ALTERED OR USED IN WHOLE OR IN PART WITHOUT THE EXPRESS WRITTEN PERMISSION OF GIPE ASSOCIATES, INC. Copyright © 2001"

1355 Beverly Rd.
Suite 105
McLean VA 22101
703.903.9100
703.903.9755 Fax

Grimm and Parker Architects

FIRST FLOOR PLAN
POWER & COMMUNICATIONS
COLLEGE OF SOUTHERN MARYLAND WELLNESS CENTER
LA PLATA, MARYLAND

DATE	DESCRIPTION
12-12-01	DD SUBMITTAL
2-8-02	DGS SUBMISSION
4-11-02	BID SET
4-30-03	BID SET

© GRIMM AND PARKER,P.C. 2001

E3.1

DGS# - CC-09-MC99-311-A

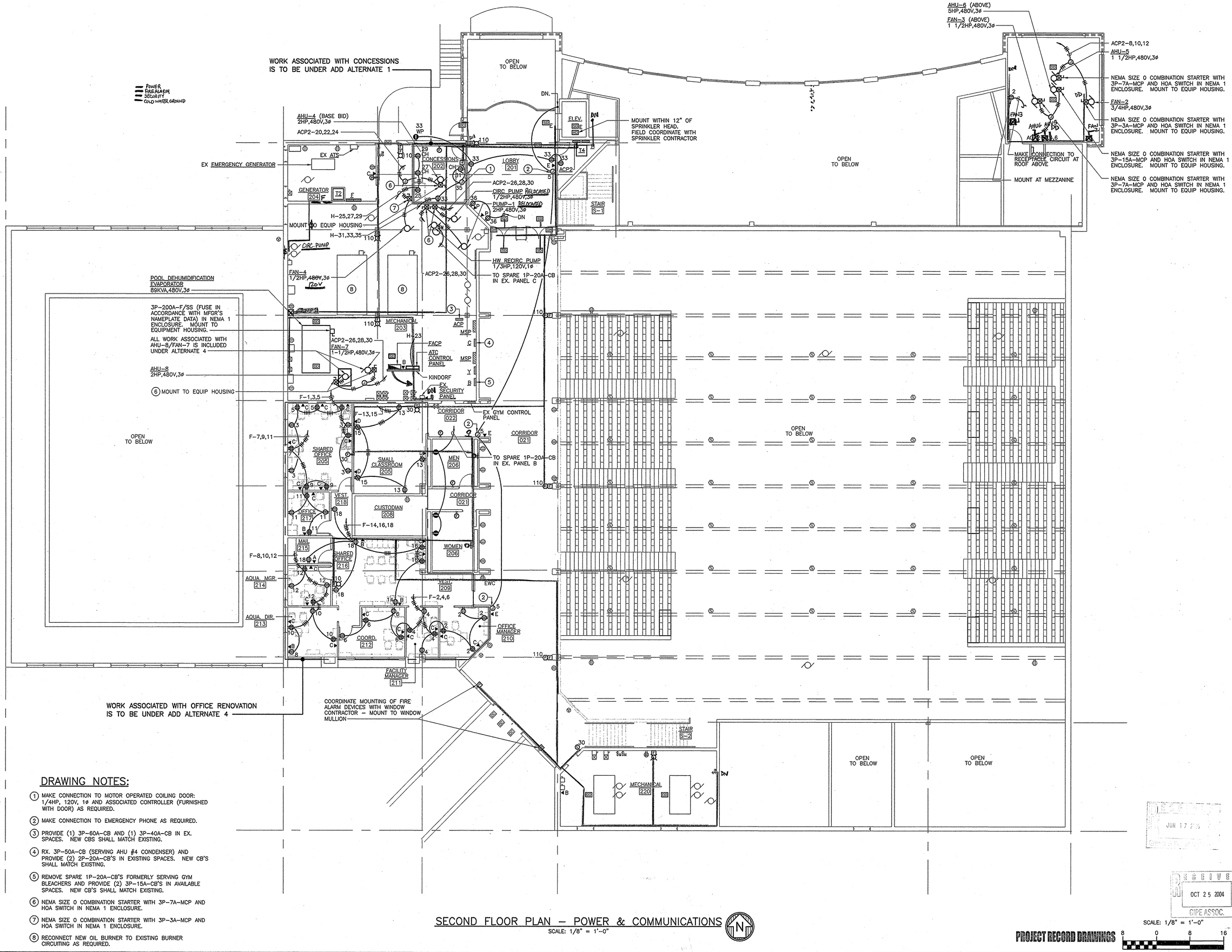

DRAWING NOTES:

1. MAKE CONNECTION TO MOTOR OPERATED COILING DOOR: 1/4HP, 120V, 1ø AND ASSOCIATED CONTROLLER (FURNISHED WITH DOOR) AS REQUIRED.
2. MAKE CONNECTION TO EMERGENCY PHONE AS REQUIRED.
3. PROVIDE (1) 3P-60A-CB AND (1) 3P-40A-CB IN EX. SPACES. NEW CBS SHALL MATCH EXISTING.
4. RX. 3P-50A-CB (SERVING AHU #4 CONDENSER) AND PROVIDE (2) 2P-20A-CB'S IN EXISTING SPACES. NEW CB'S SHALL MATCH EXISTING.
5. REMOVE SPARE 1P-20A-CB'S FORMERLY SERVING GYM BLEACHERS AND PROVIDE (2) 3P-15A-CB'S IN AVAILABLE SPACES. NEW CB'S SHALL MATCH EXISTING.
6. NEMA SIZE 0 COMBINATION STARTER WITH 3P-7A-MCP AND HOA SWITCH IN NEMA 1 ENCLOSURE.
7. NEMA SIZE 0 COMBINATION STARTER WITH 3P-3A-MCP AND HOA SWITCH IN NEMA 1 ENCLOSURE.
8. RECONNECT NEW OIL BURNER TO EXISTING BURNER CIRCUITING AS REQUIRED.

SECOND FLOOR PLAN – POWER & COMMUNICATIONS
SCALE: 1/8" = 1'-0"

SCALE: 1/8" = 1'-0"

PROJECT RECORD DRAWINGS

college of southern maryland

Gipe Associates Inc.
Consulting Engineers
Baltimore, Maryland
Easton, Maryland
GAI WO# 01044

"THIS DRAWING AND THE DESIGN AND CONSTRUCTION FEATURES DISCLOSED ARE PROPRIETARY TO GIPE ASSOCIATES, INC. AND SHALL NOT BE ALTERED OR REUSED IN WHOLE OR IN PART WITHOUT THE EXPRESS WRITTEN PERMISSION OF GIPE ASSOCIATES, INC. Copyright © 2001"

1355 Beverly Rd.
Suite 105
McLean VA 22101
703.903.9100
703.903.9755 Fax

Grimm and Parker Architects

SECOND FLOOR PLAN
POWER & COMMUNICATIONS
COLLEGE OF SOUTHERN MARYLAND WELLNESS CENTER
LA PLATA, MARYLAND

DATE	DESCRIPTION
12-12-01	DD SUBMITTAL
2-8-02	DGS SUBMISSION
4-11-02	BID SET
4-30-03	BID SET

© GRIMM AND PARKER,P.C. 2001

RECEIVED JUN 17 25

RECEIVED OCT 25 2004 GIPE ASSOC.

E3.2

DGS# - CC-09-MC99-311

Gipe Associates, Inc.
CONSULTING ENGINEERS

RESPOND TO:
BALTIMORE ■
EASTON □

SHOP DRAWING COMMENTS

W.O.#01044

College of Southern Maryland – Wellness Center (P.E. Building)
Shop Drawing No. E-22: Electrical Testing – Voice/Data/Fiber Test Results
Voice/Data/Fiber Record Drawings & Electrical O & M Manual (Revised)

- ■ REVIEWED
- □ COMMENTS NOTED
- □ REJECTED
- □ REVISE AND RESUBMIT
- □ RESUBMIT AS SPECIFIED
- □ RESUBMIT FOR RECORD ONLY
- □ FOR INFORMATION ONLY/NOT REVIEWED

This review is only for general conformance with the design concept of the project and general compliance with the information given in the Contract Documents and does not include review of quantities, dimensions, weights or gauges, fabrication processes, sequence of work, construction methods, coordination with the work of other trades, or construction safety precautions all of which are the responsibility of the Contractor. Corrections or comments made on or attached to the shop drawings (or the absence of corrections and comments) during this review in no way relieves the Contractor from complying with the requirements of the Contract Drawings.

Engineer's Comments:

No comments.

Processed by: JFK Date: 05/19/05

Baltimore
849 Fairmount Avenue, Suite 102
Baltimore, Maryland 21286
410-832-2420 TEL
410-832-2418 FAX

Easton
8659 Commerce Drive, PO Box 1147
Easton, Maryland 21601
410-822-8668 TEL
410-822-6306 FAX

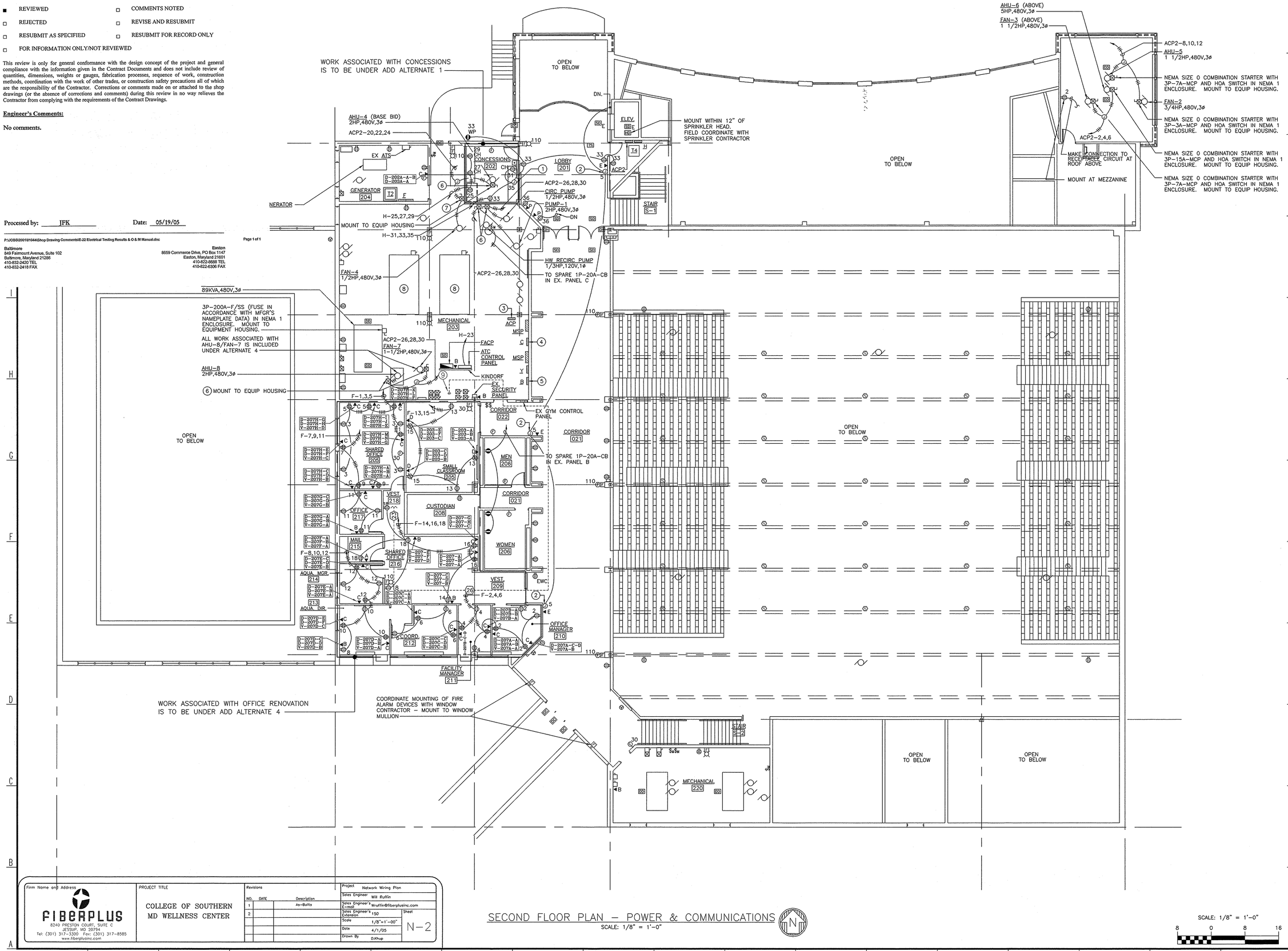

SECOND FLOOR PLAN – POWER & COMMUNICATIONS
SCALE: 1/8" = 1'-0"

SCALE: 1/8" = 1'-0"
8 0 8 16

FIBERPLUS
8240 PRESTON COURT, SUITE C
JESSUP, MD 20794
Tel: (301) 317-3300 Fax: (301) 317-8585
www.fiberplusinc.com

PROJECT TITLE
COLLEGE OF SOUTHERN MD WELLNESS CENTER

Revisions			
NO.	DATE	Description	
1		As-Builts	
2			

Project: Network Wiring Plan
Sales Engineer: Will Ruffin
Sales Engineer's E-mail: Wruffin@fiberplusinc.com
Sales Engineer's Extension: 150
Sheet: N-2
Scale: 1/8"=1'-00"
Date: 4/1/05
Drawn By: DJKrup

College of Southern Maryland

Gipe Associates Inc.
Consulting Engineers
Baltimore, Maryland
Easton, Maryland

GAI WO# 01044

"THIS DRAWING AND THE DESIGN AND CONSTRUCTION FEATURES DISCLOSED ARE PROPRIETARY TO GIPE ASSOCIATES, INC. AND SHALL NOT BE ALTERED OR REUSED IN WHOLE OR IN PART WITHOUT THE EXPRESS WRITTEN PERMISSION OF GIPE ASSOCIATES, INC. Copyright © 2001"

Grimm and Parker Architects
1355 Beverly Rd.
Suite 105
McLean VA 22101
703.903.9100
703.903.9755 Fax

SECOND FLOOR PLAN
POWER & COMMUNICATIONS
COLLEGE OF SOUTHERN MARYLAND WELLNESS CENTER
LA PLATA, MARYLAND

DATE	DESCRIPTION
12-12-01	DD SUBMITTAL
2-8-02	DGS SUBMISSION
4-11-02	BID SET
4-30-03	BID SET

RECEIVED MAY 10 2005 GIPE ASSOC.

© GRIMM AND PARKER,P.C. 2001

E3.2

DGS# – CC-09-MC99-311

PROJECT RECORD DRAWINGS

DRAWING NOTES:

1. MAKE CONNECTION TO MOTOR OPERATED COILING DOOR: 1/4HP, 120V, 1ø AND ASSOCIATED CONTROLLER (FURNISHED WITH DOOR) AS REQUIRED.
2. MAKE CONNECTION TO EMERGENCY PHONE AS REQUIRED.
3. PROVIDE (1) 3P-60A-CB AND (1) 3P-40A-CB IN EX. SPACES. NEW CBS SHALL MATCH EXISTING.
4. RX. 3P-50A-CB (SERVING AHU #4 CONDENSER) AND PROVIDE (2) 2P-20A-CB'S IN EXISTING SPACES. NEW CB'S SHALL MATCH EXISTING.
5. REMOVE SPARE 1P-20A-CB'S FORMERLY SERVING GYM BLEACHERS AND PROVIDE (2) 3P-15A-CB'S IN AVAILABLE SPACES. NEW CB'S SHALL MATCH EXISTING.
6. NEMA SIZE 0 COMBINATION STARTER WITH 3P-7A-MCP AND HOA SWITCH IN NEMA 1 ENCLOSURE.
7. NEMA SIZE 0 COMBINATION STARTER WITH 3P-3A-MCP AND HOA SWITCH IN NEMA 1 ENCLOSURE.
8. RECONNECT NEW OIL BURNER TO EXISTING BURNER CIRCUITING AS REQUIRED.
9. RG-11 FEED FROM 1st FLOOR IDF EXACT LOCATION OF FLOOR CORE/SLEEVE TO BE DETERMINED

WORK ASSOCIATED WITH CONCESSIONS IS TO BE UNDER ADD ALTERNATE 1

WORK ASSOCIATED WITH OFFICE RENOVATION IS TO BE UNDER ADD ALTERNATE 4

COORDINATE MOUNTING OF FIRE ALARM DEVICES WITH WINDOW CONTRACTOR – MOUNT TO WINDOW MULLION

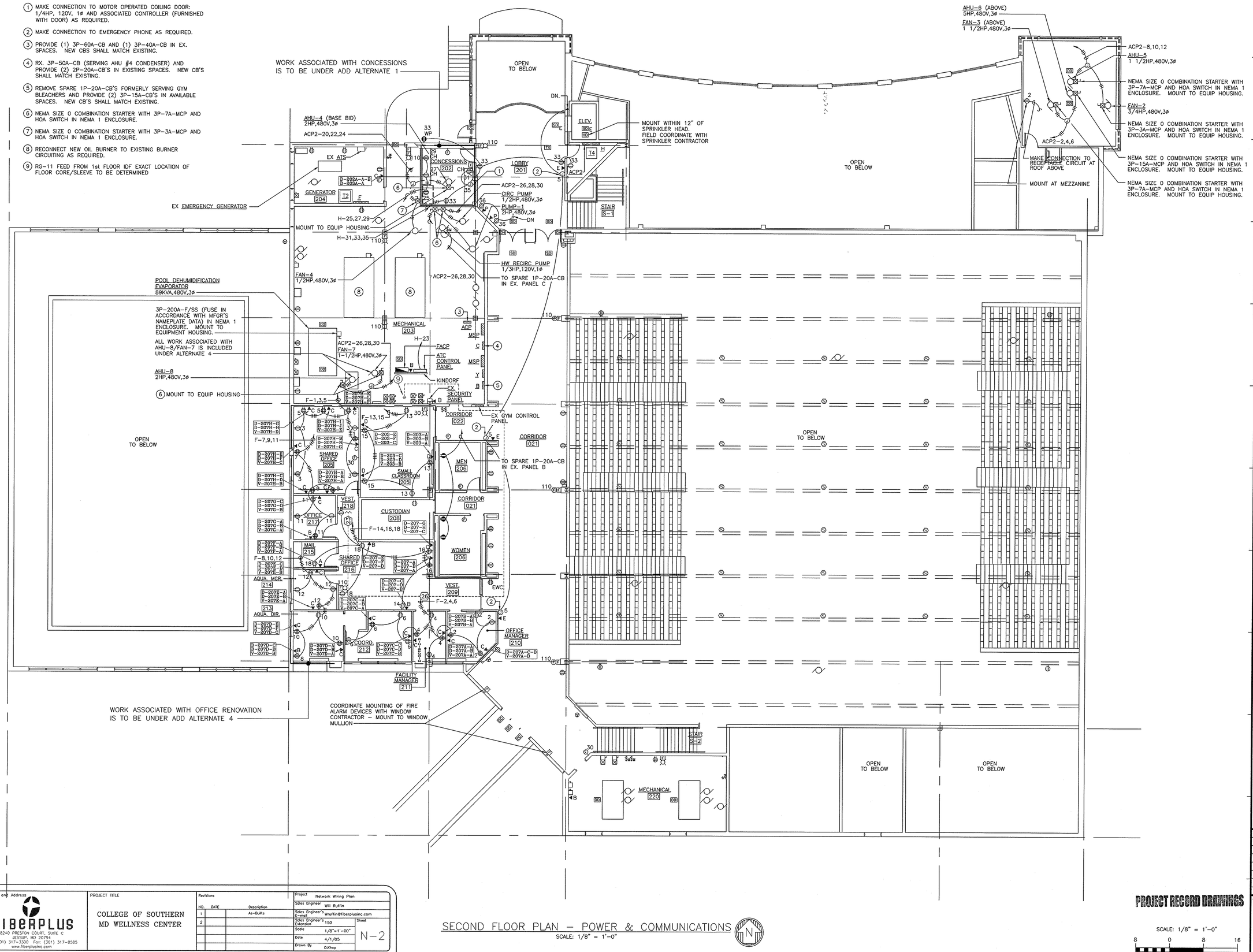

SECOND FLOOR PLAN – POWER & COMMUNICATIONS

SCALE: 1/8" = 1'-0"

Firm Name and Address	PROJECT TITLE	Revisions			Project	Network Wiring Plan	
FIBERPLUS 8240 PRESTON COURT, SUITE C JESSUP, MD 20794 Tel: (301) 317-3300 Fax: (301) 317-8585 www.fiberplusinc.com	COLLEGE OF SOUTHERN MD WELLNESS CENTER	NO.	DATE	Description	Sales Engineer	Will Ruffin	
		1		As-Builts	Sales Engineer's E-mail	Wruffin@fiberplusinc.com	
		2			Sales Engineer's Extension	150	Sheet
					Scale	1/8"=1'-00"	N-2
					Date	4/1/05	
					Drawn By	DJKhup	

PROJECT RECORD DRAWINGS

SCALE: 1/8" = 1'-0"

8 0 8 16

CSM college of southern maryland

Gipe Associates Inc.
Consulting Engineers
Baltimore, Maryland
Easton, Maryland

GAI WO# 01044

"THIS DRAWING AND THE DESIGN AND CONSTRUCTION FEATURES DISCLOSED ARE PROPRIETARY TO GIPE ASSOCIATES, INC. AND SHALL NOT BE ALTERED OR REUSED IN WHOLE OR IN PART WITHOUT THE EXPRESS WRITTEN PERMISSION OF GIPE ASSOCIATES, INC. Copyright © 2001"

1355 Beverly Rd.
Suite 105
McLean VA 22101
703.903.9100
703.903.9755 Fax

Grimm and Parker Architects

SECOND FLOOR PLAN
POWER & COMMUNICATIONS
COLLEGE OF SOUTHERN MARYLAND WELLNESS CENTER
LA PLATA, MARYLAND

DATE	DESCRIPTION
12-12-01	DD SUBMITTAL
2-8-02	DGS SUBMISSION
4-11-02	BID SET
4-30-03	BID SET

© GRIMM AND PARKER,P.C. 2001

E3.2

DGS# – CC-09-MC99-311

DUCTLESS SPLIT SYSTEM CONDENSER
12.7FLA,208V,1ø

2P-30A-F/SS (FUSE PER MFGR'S NEMAPLATE DATA) IN NEMA 3R ENCLOSURE. MOUNT TO EQUIP HOUSING.

TO SPARE 1P-20A-CB IN EX PANEL D

FAN-6
1/4HP,120V,1ø

MANUAL MOTOR STARTER WITH HOA IN NEMA 3R ENCLOSURE. MOUNT TO EQUIPMENT HOUSING.

H-5,7

H-42

H-17

FAN-8
1/4HP,120V,1ø

ACCU-4
14.2KVA,480V,3ø

MOUNT 24" ABOVE ROOF LEVEL (TYPICAL)

3P-30A-F/SS (FUSE PER MFGR'S NEMAPLATE DATA) IN NEMA 3R ENCLOSURE. MOUNT TO EQUIP HOUSING.

WP

ACP2-14,16,18

WP

H-1,3

2P-30A-F/SS (FUSE PER MFGR'S NEMAPLATE DATA) IN NEMA 3R ENCLOSURE. MOUNT TO EQUIP HOUSING.

DUCTLESS SPLIT SYSTEM CONDENSER
12.7FLA,208V,1ø

TO FIRST FLOOR - REFER TO DWG. E3.1 FOR CONTINUATION

ACCU-6
20KVA,480V,3ø

MANUAL MOTOR STARTER WITH HOA IN NEMA 3R ENCLOSURE. MOUNT TO EQUIP HOUSING.

FAN-5
1/20HP,120V,1ø

WP 2

ACP2 13,15,17 WITH 3#8+#10GW-1"C

ACP2-1,3,5

ACCU-5
6.6KVA,480V,3ø

3P-60A-F/SS (FUSE PER MFGR'S NEMAPLATE DATA) IN NEMA 3R ENCLOSURE. MOUNT TO EQUIP HOUSING.

3P-30A-F/SS (FUSE PER MFGR'S NEMAPLATE DATA) IN NEMA 3R ENCLOSURE. MOUNT TO EQUIP HOUSING.

ALL WORK ASSOCIATED WITH ACCU-8 IS UNDER ALTERNATE 4

EX. FAN

ACCU-8
17.8KVA,480V,3ø

3P-60A-F/SS (FUSE PER MFGR'S NEMAPLATE DATA) IN NEMA 3R ENCLOSURE. MOUNT TO EQUIP HOUSING.

AHU-7
35.4KVA,480V,3ø

DEHUMIDIFICATION SYSTEM CONDENSING UNIT
6.6KVA,480V,3ø

ACP7-38,40,42
3#10+#10GW-3/4"C.

WP

ACP2-37,39,41 WITH
3#6+#8GW-1"C.

WP

TO SPARE 3P-15A-CB IN EX PNL ACP

3P-30A-F/SS (FUSE PER MFGR'S NEMAPLATE DATA) IN NEMA 3R ENCLOSURE. MOUNT TO EQUIP HOUSING.

2P-30A-F/SS (FUSE PER MFGR'S NEMAPLATE DATA) IN NEMA 3R ENCLOSURE. MOUNT TO EQUIP HOUSING.

DUCTLESS SPLIT SYSTEM CONDENSER
12.7FLA,208V,1ø

H-9,11

EX. FAN

EX. FAN

EXISTING ROOF HATCH

EX. ACCU-2

EX. ACCU-3

ROOF PLAN - ELECTRICAL

SCALE: 1/8" = 1'-0"

N

PROJECT RECORD DRAWINGS

SCALE: 1/8" = 1'-0"

8 0 8 16

Gipe Associates Inc.
Consulting Engineers
Baltimore, Maryland
Easton, Maryland
GAI WO# 01044

"THIS DRAWING AND THE DESIGN AND CONSTRUCTION FEATURES DISCLOSED ARE PROPRIETARY TO GIPE ASSOCIATES, INC. AND SHALL NOT BE ALTERED OR REUSED IN WHOLE OR IN PART WITHOUT EXPRESS WRITTEN PERMISSION OF GIPE ASSOCIATES, INC. Copyright © 2003"

1355 Beverly Rd.
Suite 105
McLean VA 22101
703.903.9100
703.903.9755 Fax

Grimm and Parker Architects

ROOF PLAN ELECTRICAL
COLLEGE OF SOUTHERN MARYLAND WELLNESS CENTER
LA PLATA, MARYLAND

DATE	DESCRIPTION
12-12-01	DD SUBMITTAL
2-8-02	DGS SUBMISSION
4-11-02	BID SET
4/30/03	BID SET

© GRIMM AND PARKER,P.C. 2001

RECEIVED JUN 17 2 5

RECEIVED OCT 2 5 2004 GIPE ASSOC.

E3.3

DGS# - CC-09-MC99-311

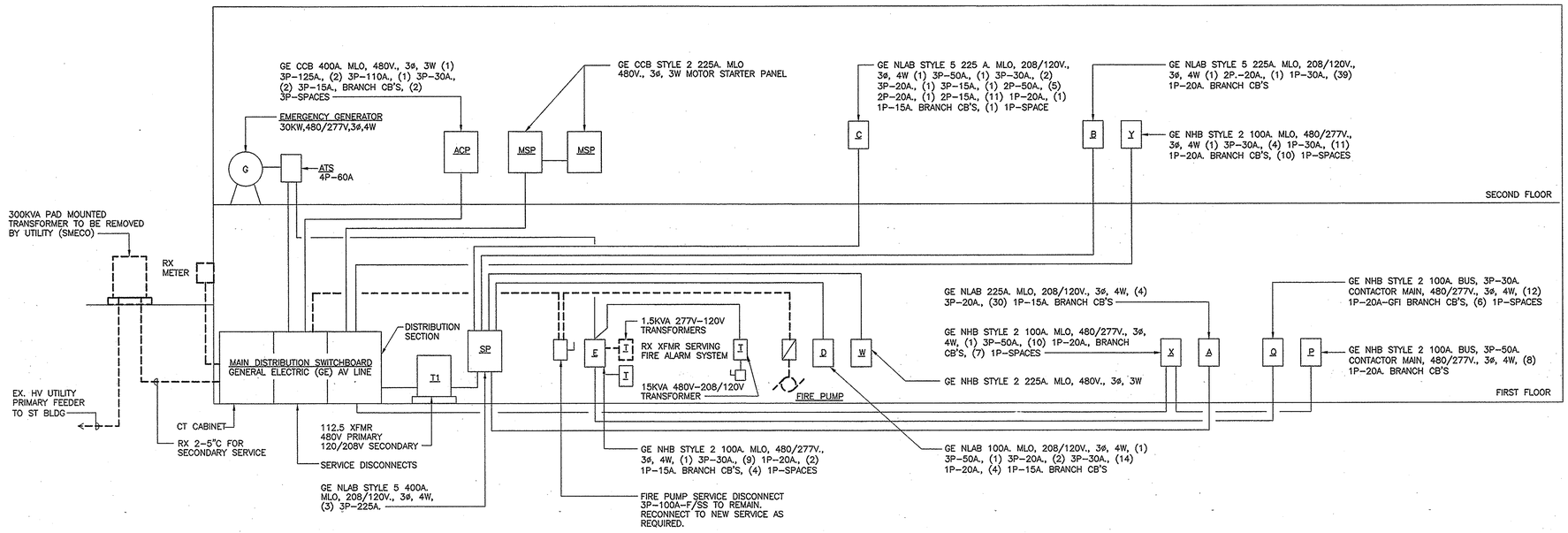

SCHEMATIC POWER RISER DIAGRAM – DEMOLITION

NO SCALE

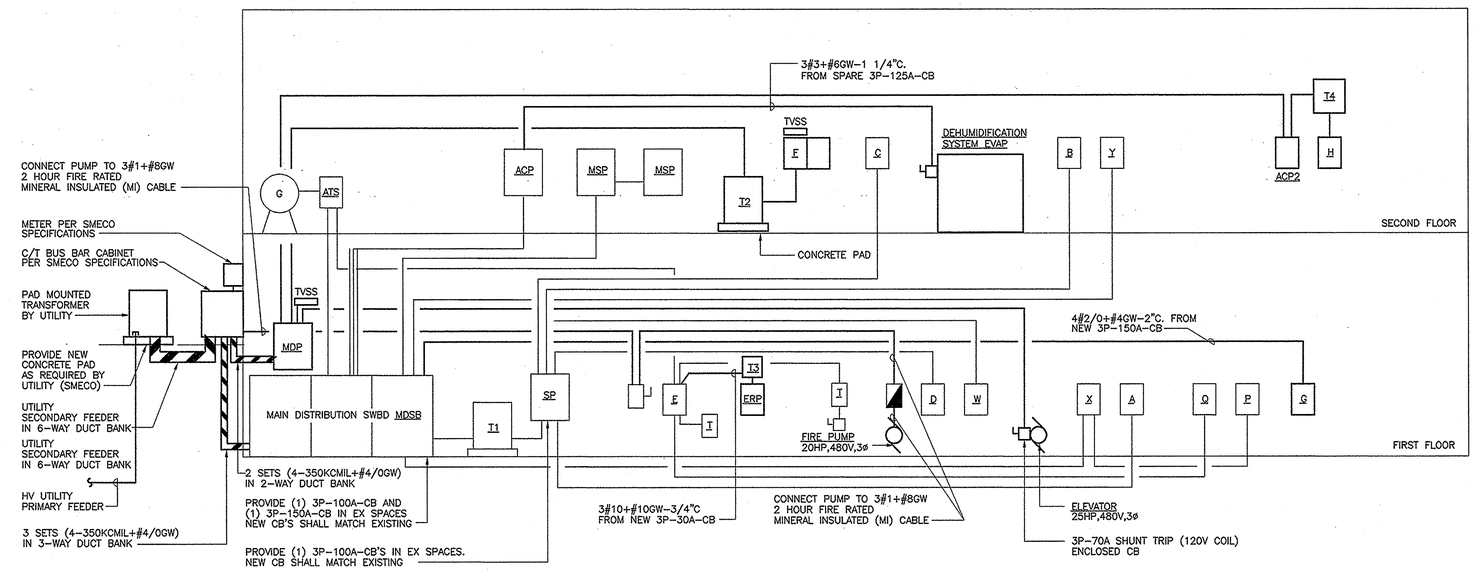

SCHEMATIC POWER RISER DIAGRAM

NO SCALE

NOTE: REFER TO SCHEDULES, DWG. E5.1 FOR ADDITIONAL INFORMATION

LOAD SUMMARY

	NEW CONNECTED LOADS	NEW DEMAND LOAD
LIGHTING	2KVA	2KVA
RECEPTACLES	95KVA	53KVA
HVAC	113KVA	113KVA
ELEVATOR	23KVA	23KVA
EXISTING	–	328KVA
TOTAL		523 KVA

college of southern maryland

Gipe Associates Inc.
Consulting Engineers
Baltimore, Maryland
Easton, Maryland
GAI WO# 01044

"THIS DRAWING AND THE DESIGN AND CONSTRUCTION FEATURES DISCLOSED ARE PROPRIETARY TO GIPE ASSOCIATES, INC. AND SHALL NOT BE ALTERED OR REUSED IN WHOLE OR IN PART WITHOUT THE EXPRESS WRITTEN PERMISSION OF GIPE ASSOCIATES, INC. Copyright © 2001"

1355 Beverly Rd.
Suite 105
McLean VA 22101
703.903.9100
703.903.9755 Fax

Grimm and Parker Architects

SCHEMATIC POWER RISER DIAGRAMS

COLLEGE OF SOUTHERN MARYLAND WELLNESS CENTER
LA PLATA, MARYLAND

DATE	DESCRIPTION
12-12-01	DD SUBMITTAL
2-8-02	DGS SUBMISSION
4-11-02	BID SET
4-30-03	BID SET

© GRIMM AND PARKER,P.C. 2001

E4.1

DGS# - CC-09-MC99-311

RECEIVED JUN 17 '03

RECEIVED OCT 25 2004 GIPE ASSOC.

PROJECT RECORD DRAWINGS

DRAWING NOTES:

1. EX 24 PORT FIBER OPTIC TERMINATION UNIT. RELOCATE TO NEW MDF.
2. EX FIBER OPTIC TERMINATION UNIT WITH ETHERNET TRANSCEIVER. RELOCATE TO NEW MDF
3. PROVIDE CATEGORY 5E VOICE BACKBONE CABLES. SIZE FOR 50% SPARE CAPACITY (PLUS 100 % OF ALL VOICE DROPS INDICATED). MINIMUM OF 150 PAIRS SHALL BE PROVIDED BETWEEN IDF & MDF.
4. PROVIDE 25 PAIR CATEGORY 5E DATA CABLES FOR COMPRESSED VIDEO SERVICE BETWEEN IDF AND MDF.
5. PROVIDE FIBER OPTIC TERMINATION ENCLOSURE.
6. PROVIDE CATEGORY 5E DATA PATCH PANEL.
7. PROVIDE 110 BLOCKS, QUANTITY AS REQUIRED.
8. REFER TO DETAILS FOR ADDITIONAL WIRING INFORMATION.
9. PROVIDE 200 PAIR CATEGORY 5E VOICE BACKBONE CABLES FROM MDF TO MPOP.

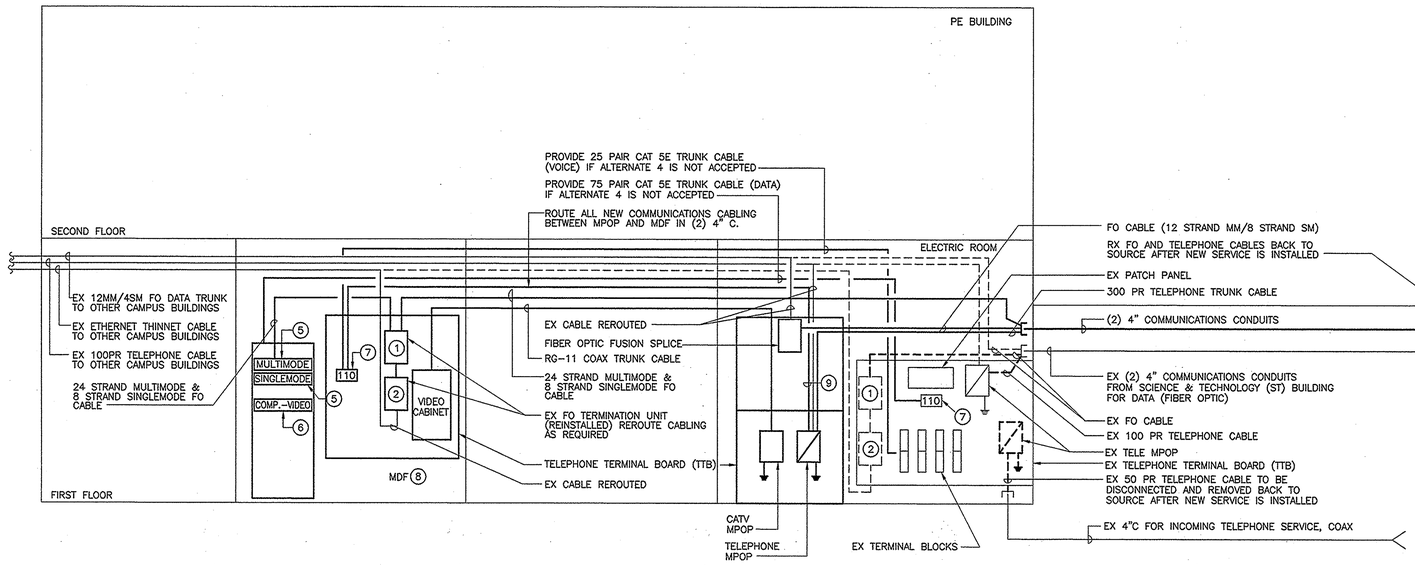

VOICE/DATA/VIDEO SYSTEM BACKBONE RISER DIAGRAM

SCALE: NONE

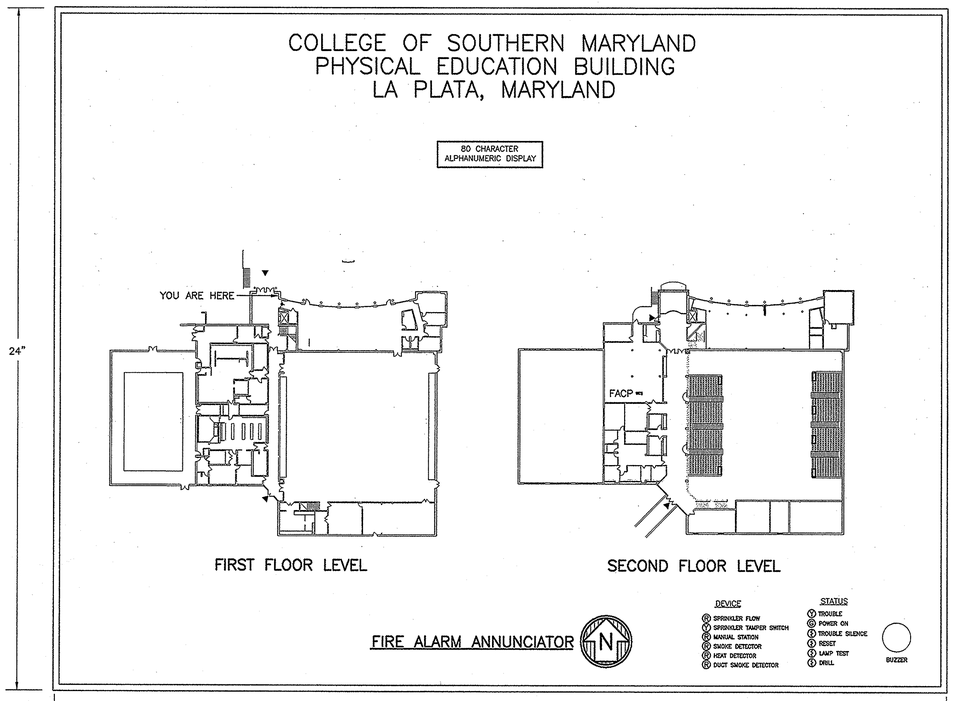

FIRE ALARM GRAPHIC ANNUNCIATOR PANEL DETAIL

NO SCALE

LEGEND

- (R) RED LED
- (G) GREEN LED
- (Y) YELLOW LED
- (S) KEY SWITCH

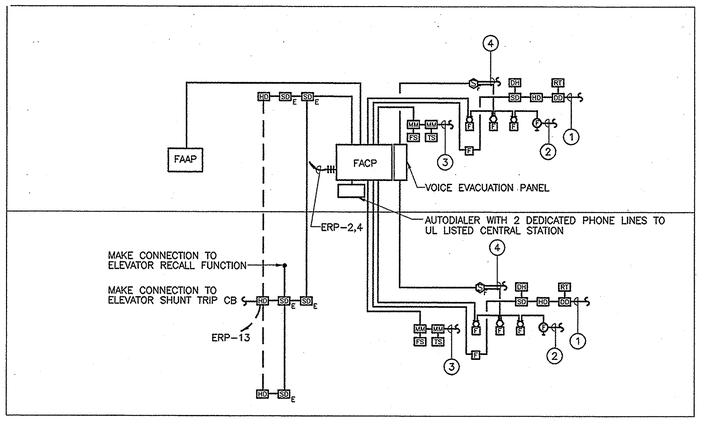

NOTES: REFER TO FLOOR PLANS FOR EXACT DEVICE COUNT AND LOCATIONS. PROVIDE CONDUIT AND WIRING AS REQUIRED BY SYSTEM MANUFACTURER.

SCHEMATIC FIRE ALARM SYSTEM RISER DIAGRAM

NO SCALE

DETAIL NOTES:

1. TO OTHER ALARM INITIATING DEVICES IN THIS ZONE.
2. TO OTHER ALARM NOTIFICATION DEVICES IN THIS ZONE.
3. TO OTHER SPRINKLER SYSTEM DEVICES IN THIS ZONE.
4. TO OTHER VOICE EVACUATION SPEAKERS IN THIS ZONE.

RECEIVED OCT 17 '03

OCT 25 2004 GIPE ASSOC

PROJECT RECORD DRAWINGS

College of Southern Maryland

Gipe Associates Inc.
Consulting Engineers
Baltimore, Maryland
Easton, Maryland
GAI WO# 01044

"THIS DRAWING AND THE DESIGN AND CONSTRUCTION FEATURES INCLUDED ARE PROPRIETARY TO GIPE ASSOCIATES, INC. AND SHALL NOT BE ALTERED OR REUSED IN WHOLE OR IN PART WITHOUT THE EXPRESS WRITTEN PERMISSION OF GIPE ASSOCIATES, INC. Copyright © 2001"

1355 Beverly Rd.
Suite 105
McLean VA 22101
703.903.9100
703.903.9755 Fax

Grimm and Parker Architects

SCHEMATIC COMMUNICATIONS SYSTEM RISER DIAGRAMS

COLLEGE OF SOUTHERN MARYLAND WELLNESS CENTER
LA PLATA, MARYLAND

DATE	DESCRIPTION
12-12-01	DD SUBMITTAL
2-8-02	DGS SUBMISSION
4-11-02	BID SET
4-30-03	BID SET

© GRIMM AND PARKER,P.C. 2001

E4.2

DGS# - CC-09-MC99-311

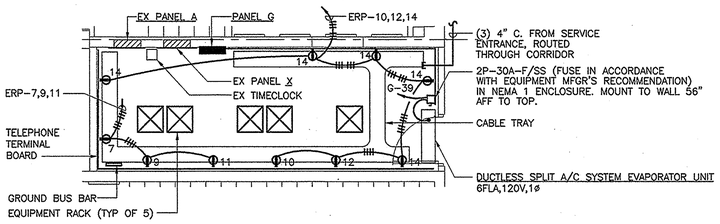

FIRST FLOOR IDF – PART PLAN

SCALE: 1/4" = 1'-0"

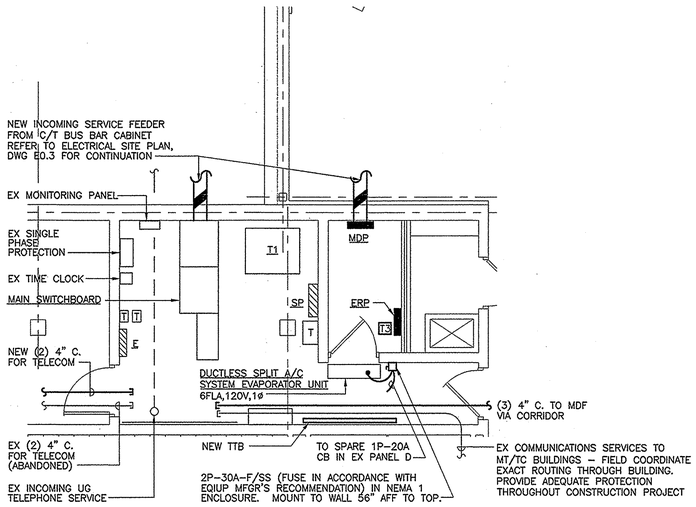

FIRST FLOOR ELECTRIC ROOM – PART PLAN

SCALE: 1/4" = 1'-0"

DRY TYPE TRANSFORMER SCHEDULE

XFMR	KVA	PRIMARY ø	PRIMARY V.	WIRING No.	WIRING SIZE	WIRING G.W.	WIRING C.	PRIMARY CB	SECONDARY ø	SECONDARY V.	WIRING No.	WIRING SIZE	WIRING GW	WIRING C.	SECONDARY CB	MOUNTING	NOTES
T1																	EXISTING
T2	45	3	480	3	#1	#8	1 1/2"	90A	3	208/120	5	#1/0	#6	2"	150A	FLOOR	K-13 RATED
T3	15	3	480	3	#10	#10	3/4"	30A	3	208/120	4	#6	#10	1"	50A	WALL	
T4	45	3	480	3	#1	#8	1 1/2"	90A	3	208/120	4	#1/0	#6	2"	150A	SUSPENDED	

PANEL SCHEDULE : **ERP** — AMP BUS CAP : **100A** — **60A MCB**
MOUNTING : **SURFACE** — PHASE : **3** — WIRE : **4** — VOLTS : **208/120** — A.I.C. **10,000** — LOCATION: **ELEC RM**

CKT.	DESCRIPTION	BREAKER P	BREAKER AMPS	VOLT-AMP øA	VOLT-AMP øB	VOLT-AMP øC	CKT.	DESCRIPTION	BREAKER P	BREAKER AMPS	VOLT-AMP øA	VOLT-AMP øB	VOLT-AMP øC
1	ELEV CAB LTS/FAN	1	20	800			2	FACP	1	20	1500		
3	ELEV CONTROLS	1	20		400		4	FACP	1	20		1500	
5	EMERGENCY PHONES	1	20			200	6	SECURITY SYSTEM	1	20			800
7	MDF	1	20	1500			8	SECURITY SYSTEM	1	20	800		
9	MDF	1	20		1500		10	MDF	1	20		1500	
11	MDF	1	20			1500	12	MDF	1	20			1500
13	SPARE	1	20	–			14	MDF	1	20	800		
15	SPARE	1	20		–		16	SPARE	1	20		–	
17	SPARE	1	20			–	18	TTB	1	20			1500
	SUB-TOTAL			2300	1900	1700		SUB-TOTAL			3100	3000	3800
								TOTAL			4400	4900	5500
												TOTAL KVA	15

PANEL SCHEDULE : **F (SECTION 1)** — AMP BUS CAP : **225A** — **150A MCB**
MOUNTING : **SURFACE** — PHASE : **3** — WIRE : **4** — VOLTS : **208/120** — A.I.C. **10,000** — LOCATION: **GENERATOR RM**

CKT.	DESCRIPTION	BREAKER P	BREAKER AMPS	VOLT-AMP øA	VOLT-AMP øB	VOLT-AMP øC	CKT.	DESCRIPTION	BREAKER P	BREAKER AMPS	VOLT-AMP øA	VOLT-AMP øB	VOLT-AMP øC
1	SHARED OFFICE-205	1	20	800			2	OFFICE MANAGER-210	1	20	1200		
3	SHARED OFFICE-205	1	20		800		4	FACILITY MANAGER-211	1	20		1200	
5	SHARED OFFICE-205	1	20			800	6	COORDINATOR-212	1	20			1200
7	SHARED OFFICE-205	1	20	400			8	AQUA DIRECTOR-213	1	20	1200		
9	SHARED OFFICE-205	1	20		800		10	PRINTER-213	1	20		1000	
11	OFFICE-217	1	20			1200	12	AQUA MANGER-214	1	20			1200
13	CLASSROOM-205	1	20	1000			14	PRINTER-216	1	20	1200		
15	CLASSROOM-205	1	20		1200		16	SHARED OFFICE-216	1	20		800	
17	CLASSROOM-103	1	20			1200	18	SHARED OFFICE-216	1	20			800
19	CLASSROOM-103	1	20	1200			20	PRINTER-115	1	20	1200		
21	CHECK-IN	1	20		800		22	PRINTER-115	1	20		1200	
23	ASSESSMENT-105	1	20			1200	24	WFS/RES-115	1	20			800
25	WC COORD-107	1	20	1200			26	WFS OFFICE-113	1	20	800		
27	WFS DIR-111	1	20		1200		28	WFS OFFICE-113	1	20		800	
29	WFS DIR-111 PRINTER	1	20			1200	30	WFS OFFICE-113	1	20			1200
	SUB-TOTAL			4600	4800	5600		SUB-TOTAL			5600	5000	5200
PROVIDE WITH 200% RATED NEUTRAL BUS								TOTAL (SECTION 1)			10200	9800	10800

PANEL SCHEDULE : **F (SECTION 2)** — AMP BUS CAP : **225A** — **225A MLO**
MOUNTING : **SURFACE** — PHASE : **3** — WIRE : **4** — VOLTS : **208/120** — A.I.C. **10,000** — LOCATION: **GENERATOR RM**

CKT.	DESCRIPTION	BREAKER P	BREAKER AMPS	VOLT-AMP øA	VOLT-AMP øB	VOLT-AMP øC	CKT.	DESCRIPTION	BREAKER P	BREAKER AMPS	VOLT-AMP øA	VOLT-AMP øB	VOLT-AMP øC
31	~~TRAINER-161~~ WFS OFFICE	1	20	400			32	LOBBY DESK	1	20	400		
33	FITNESS	1	20		1000		34	LOBBY	1	20		1200	
35	FITNESS	1	20			1000	36	PHONES	1	20			1200
37	~~SPARE~~ FAN #4	1	20	–			38	SPARE	1	20	–		
39	SPARE	1	20		–		40	SPARE	1	20		–	
41	SPARE	1	20			–	42	SPARE	1	20			–
43	SPACE	1	–	–			44	~~SPACE~~ TVSS	~~3~~ 3	~~30~~ 30	–		
45	SPACE	1	–		–		46	SPACE TVSS	3	30		–	
47	SPACE	1	–			–	48	SPACE TVSS	3	30			–
49	SPACE	1	–	–			50	SPACE	1	–	–		
51	SPACE	1	–		–		52	SPACE	1	–			
53	SPACE	1	–			–	54	SPACE	1	–			
55	SPACE	1	–	–			56	~~TVSS~~ SPACE	~~3~~	~~30~~	–		
57	SPACE	1	–		–		58					–	
59	SPACE	1	–			–	60						–
	SUB-TOTAL			400	1000	1000		SUB-TOTAL			400	1200	1200
								TOTAL (SECTION 2)			800	2200	2200
								TOTAL (SECTION 1 & 2)			11000	12000	13000
PROVIDE WITH 200% RATED NEUTRAL BUS												TOTAL KVA	36

SCHEDULE OF MAIN DISTRIBUTION PANELBOARD – MDP

MOUNTING: **SURFACE** — A.I.C. RATING: **65,000** — LOCATION: **BASEMENT EQUIPMENT RM**
SERVICE: **480/277** — PHASE **3** — WIRE **4** — BUS **400A** — MAIN **400A MCB**

CKT NO.	SERVES	LOAD (KVA)	BREAKER P	BREAKER TRIP	FEEDER CONDUCTORS	FEEDER C.	REMARKS
1	SPACE		3	–	–	---	
2	SPACE		3	–	–	---	
3	SPARE		3	100A	–	---	
4	DRYER	30	3	60A	4#4+#8GW	1 1/2"	
5	PANEL ACP2	143	3	300A	2 SETS(3#3/0+#4GW)	2-2"	
6	TVSS	–	3	30A	3#6+#6GW	1 1/4"	
7	ELEVATOR	28	3	70A	3#6+#8GW	1 1/4"	PROVIDE WITH SHUNT TRIP (120V) COIL
8	PANEL F (VIA XFMR T2)	36	3	---	–	---	REFER TO TRANSFORMER SCHEDULE

PANEL SCHEDULE : **H** — AMP BUS CAP : **225A** — **150A MCB**
MOUNTING : **SURFACE** — PHASE : **3** — WIRE : **4** — VOLTS : **208/120** — A.I.C. **10,000** — LOCATION: **STORAGE**

CKT.	DESCRIPTION	BREAKER P	BREAKER AMPS	VOLT-AMP øA	VOLT-AMP øB	VOLT-AMP øC	CKT.	DESCRIPTION	BREAKER P	BREAKER AMPS	VOLT-AMP øA	VOLT-AMP øB	VOLT-AMP øC
1	COND UNIT	2	20	1500			2	EXTERIOR/ROOF/FAN	1	20	900		
3					1500		4	FITNESS-GENERAL	1	20		500	
5	SPARE	1	20			–	6	FITNESS	1	20			1000
7	SPARE	1	20	–			8	FITNESS FLOOR	1	20	1000		
9	COND UNIT	2	20		1500		10	FITNESS FLOOR	1	20		1000	
11						1500	12	FITNESS FLOOR	1	20			1000
13	FITNESS FLOOR	1	20	1000			14	FITNESS	1	20	1000		
15	FITNESS FLOOR	1	20		1000		16	FITNESS	1	20		1000	
17	ROOF RECEPT	1	20			800	18	FITNESS	1	20			1000
19	AUTO DOOR	1	20	800			20	FITNESS	1	20	1000		
21	SPARE	1	20		–		22	EWC	1	20		1200	
23	ATC PANEL	1	20			1000	24	TOILET/FITNESS	1	20			1200
25	CONCESSIONS	1	20	1200			26	LOBBY	1	20	800		
27	CONCESSIONS	1	20		1200		28	ELEV PIT	1	20		300	
29	CONCESSIONS	1	20			1500	30	ELEV MACHINE RM	1	20			200
31	CONCESSIONS	1	20	1200			32	FITNESS	1	20	1000		
33	LOBBY	1	20		1000		34	FITNESS	1	20		1000	
35	COILING DOOR	1	20			700	36	SPARE	1	20			–
37	SPACE	1	–	–			38	SPACE	1	–	–		
39	SPACE	1	–		–		40	SPACE	1	–		–	
41	SPACE	1	–			–	42	SPACE	1	–			–
	SUB-TOTAL			5700	6200	5500		SUB-TOTAL			5700	5000	4400
								TOTAL			11400	11200	9900
												TOTAL KVA	32.5

PANEL SCHEDULE : **ACP2** — AMP BUS CAP : **400A** — **400A MLO**
MOUNTING : **SURFACE** — PHASE : **3** — WIRE : **3** — VOLTS : **480** — A.I.C. **22,000** — LOCATION: **STORAGE**

CKT.	DESCRIPTION	BREAKER P	BREAKER AMPS	VOLT-AMP øA	VOLT-AMP øB	VOLT-AMP øC	CKT.	DESCRIPTION	BREAKER P	BREAKER AMPS	VOLT-AMP øA	VOLT-AMP øB	VOLT-AMP øC
1	ACCU-5	3	15	2200			2	AHU-6/FAN-3	3	15	1660		
3					2200		4					1660	
5						2200	6						1660
7	SPARE	3	15	–			8	AHU-5/FAN-2	3	15	2500		
9					–		10					2500	
11						–	12						2500
13	ACCU-6	3	40	8060			14	ACCU-4	3	30	5000		
15					8060		16					5000	
17						8060	18						5000
19	SPARE	3	15	–			20	AHU-4/FAN-4	3	15	1300		
21					–		22					1300	
23						–	24						1300
25	PUMP-1	3	15	930			26	AHU-8/FAN-7	3	15	2300		
27					930		28					2300	
29						930	30						2300
31	CIRC PUMP	3	15	280			32	PANEL H (VIA T4)	3	90	11400		
33					280		34					11200	
35						280	36						9900
37	AHU-7	3	60	7130			38	ACCU-8	3	40	5730		
39					7130		40					5730	
41						7130	42						5730
	SUB-TOTAL			18600	18600	18600		SUB-TOTAL			29590	29390	28090
								TOTAL			48190	47990	46690
												TOTAL KVA	142.9

PANEL SCHEDULE : **G** — AMP BUS CAP : **225A** — **225A MLO**
MOUNTING : **SURFACE** — PHASE : **3** — WIRE : **4** — VOLTS : **208/120** — A.I.C. **10,000** — LOCATION: **MDF ROOM**

CKT.	DESCRIPTION	BREAKER P	BREAKER AMPS	VOLT-AMP øA	VOLT-AMP øB	VOLT-AMP øC	CKT.	DESCRIPTION	BREAKER P	BREAKER AMPS	VOLT-AMP øA	VOLT-AMP øB	VOLT-AMP øC
1	HAIRDRYER-WM TEAM	1	20	1500			2	SPARE	1	20	–		
3	HAIRDRYER-WM TEAM	1	20		1500		4	SPARE	1	20		–	
5	HAIRDRYER-WM TEAM	1	20			1500	6	~~SPARE TRAINER 151~~	1	20			–
7	HAIRDRYER-WM LOCKER	1	20	1500			8	MEN-140	1	20	1500		
9	HAIRDRYER-WM LOCKER	1	20		1500		10	MEN-140	1	20		1500	
11	HAIRDRYER-WM LOCKER	1	20			1500	12	MEN-140	1	20			1500
13	HAIRDRYER-WM LOCKER	1	20	1500			14	HAIRDRYER-MEN LOCKER	1	20	1500		
15	WM-124	1	20		1500		16	HAIRDRYER-MEN LOCKER	1	20		1500	
17	WM-124	1	20			1500	18	HAIRDRYER-MEN LOCKER	1	20			1500
19	HAIRDRYER-WM LOCKER	1	20	1500			20	HAIRDRYER-MEN TEAM	1	20	1500		
21	HAIRDRYER-WM LOCKER	1	20		1500		22	HAIRDRYER-MEN TEAM	1	20		1500	
23	HAIRDRYER-WM LOCKER	1	20			1500	24	HAIRDRYER-MEN TEAM	1	20			1500
25	WOMEN/TOILET	1	20	1200			26	MENS LOCKER	1	20	1200		
27	COACH	1	20		1500		28	MENS LOCKER	1	20		1000	
29	EWC	1	20			1200	30	COACH/LAUNDRY	1	20			1500
31	ICEMAKER	1	20	1500			32	SPARE	1	20		–	
33	WHIRLPOOL	1	20		1200		34	SPARE	1	20			–
35	TRAINER/TOILET	1	20			600	36	SPARE	1	20			–
37	MENS TOILET	1	20	800			38	SCUBA COMPRESSOR	2	60	4500		
39	MDF EVAP UNIT	1	20		700		40	–	–	–		4500	
41	SPARE	1	20			–	42	MDF EVAP UNIT	1	20			700
	SUB-TOTAL			9500	9400	7800		SUB-TOTAL			10200	10000	6700
								TOTAL			19700	19400	14500
												TOTAL KVA	54.0

PROJECT RECORD DRAWINGS

OCT 25 2004

GIPE ASSOC.

College of Southern Maryland
Gipe Associates Inc. Consulting Engineers
Baltimore, Maryland
Easton, Maryland
GAI WO# 01044

THIS DRAWING AND THE DESIGN AND CONSTRUCTION FEATURES DISCLOSED ARE PROPRIETARY TO GIPE ASSOCIATES, INC. AND SHALL NOT BE ALTERED OR REUSED IN WHOLE OR IN PART WITHOUT THE EXPRESS WRITTEN PERMISSION OF GIPE ASSOCIATES, INC. Copyright © 2001

1355 Beverly Rd.
Suite 105
McLean VA 22101
703.903.9100
703.903.9755 Fax

Grimm and Parker Architects

SCHEDULES

COLLEGE OF SOUTHERN MARYLAND WELLNESS CENTER
LA PLATA, MARYLAND

DATE	DESCRIPTION
12-12-01	DD SUBMITTAL
2-8-02	DGS SUBMISSION
4-11-02	BID SET
4-30-03	BID SET

© GRIMM AND PARKER,P.C. 2001

E5.1

DGS# - CC-09-MC99-311

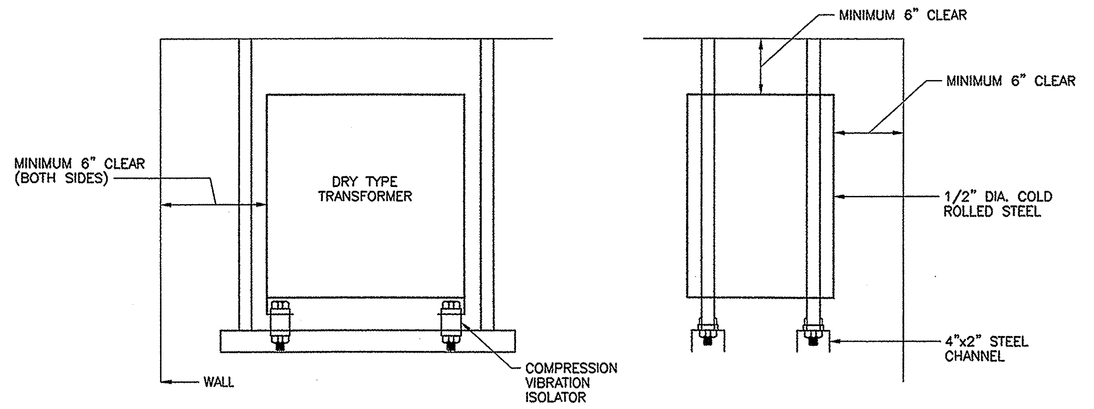

1 SUSPENDED MOUNTING OF DRY TYPE TRANSFORMER — NO SCALE

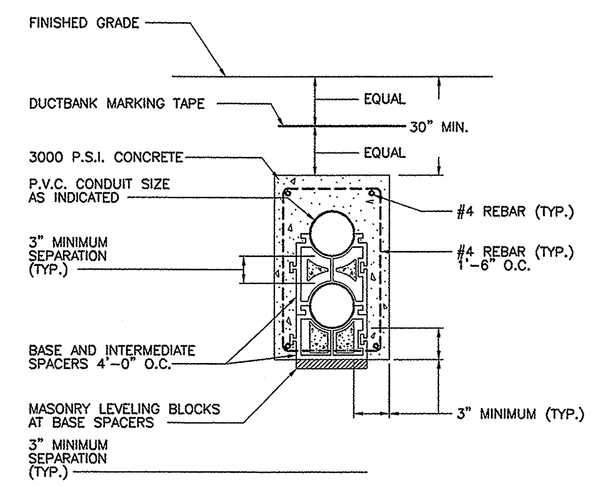

2 2-WAY CONCRETE ENCASED DUCTBANK — NO SCALE

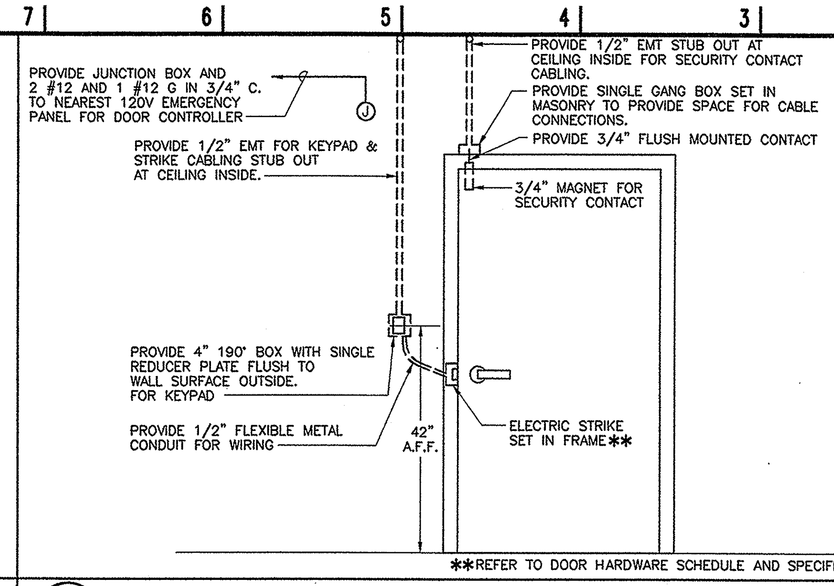

3 TYPICAL ELECTRIC DOOR LOCK & ROUGH IN — NO SCALE

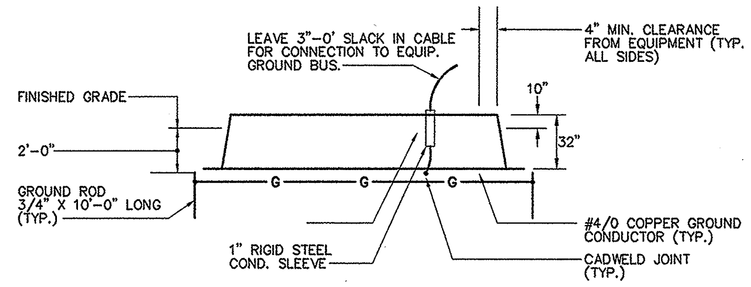

NOTE: TRANSFORMER PAD INSTALLATION SHALL BE COORDINATED IN ADVANCE WITH SMECO.

4 UTILITY TRANSFORMER PAD — NO SCALE

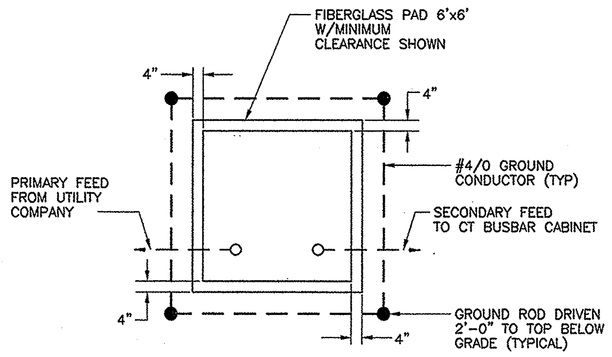

5 TRANSFORMER PAD GROUNDING — NO SCALE

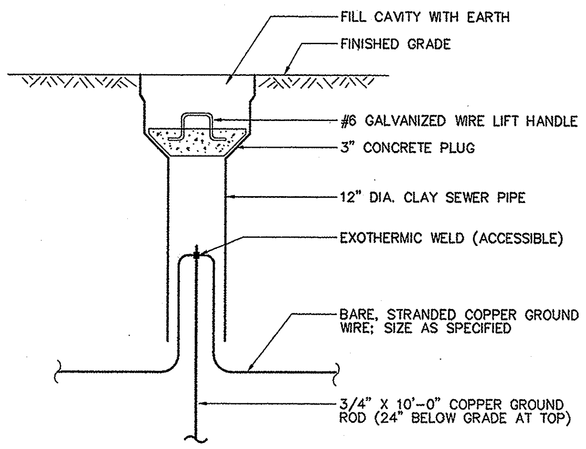

6 TYPICAL GROUND ROD TEST WELL — NO SCALE

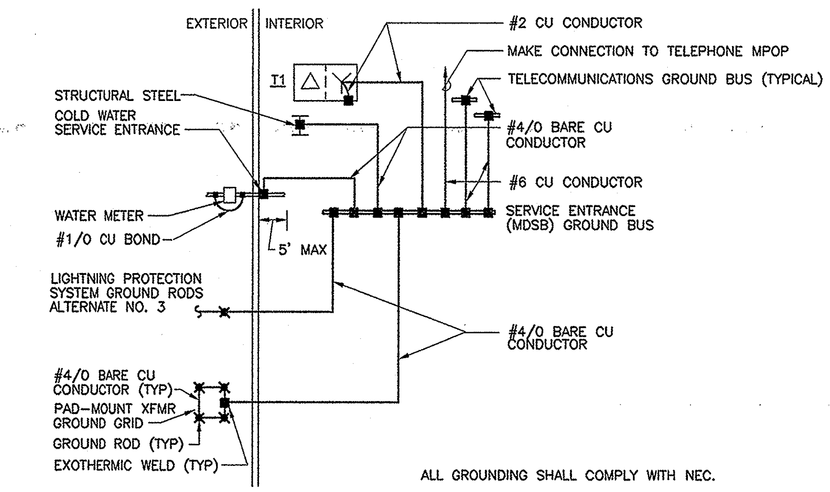

ALL GROUNDING SHALL COMPLY WITH NEC.

7 PARTIAL SCHEMATIC GROUNDING DIAGRAM — NO SCALE

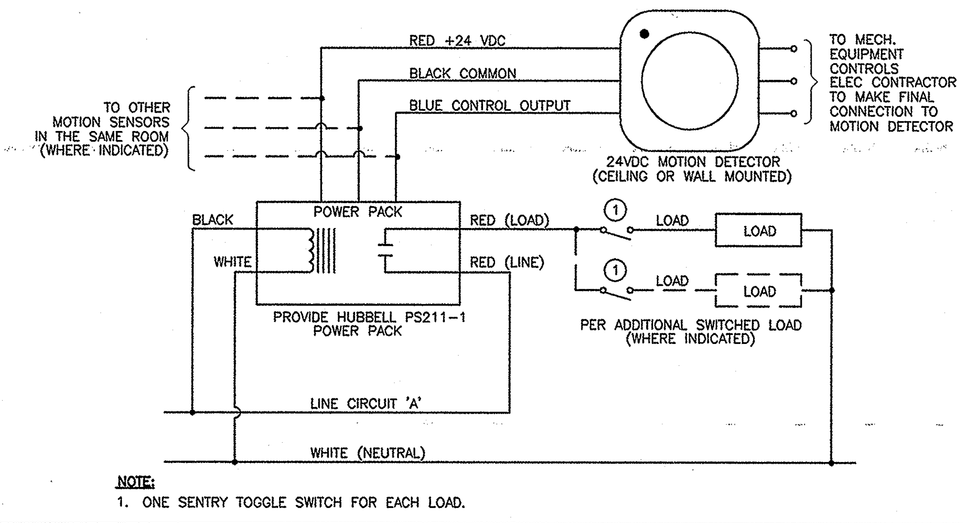

NOTE:
1. ONE SENTRY TOGGLE SWITCH FOR EACH LOAD.

8 LIGHTING CONTROL SCHEMATIC DIAGRAM — NO SCALE

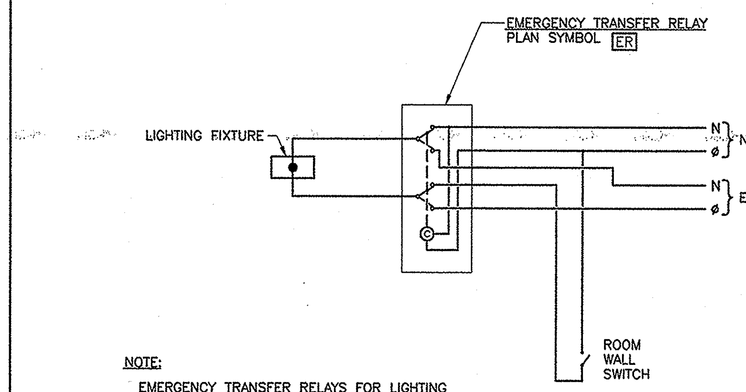

NOTE:
EMERGENCY TRANSFER RELAYS FOR LIGHTING SHALL BE TWO POLE, DOUBLE THROW, ELECTRICALLY HELD AND SHALL MEET ALL REQUIREMENTS OF UL STANDARD 1008 FOR EMERGENCY LIGHTING CONTROLS. CONTROL COIL VOLTAGE SHALL MATCH FIXTURE BALLAST VOLTAGE. MOUNT IN NEMA 1 ENCLOSURE IN ACCESSIBLE SPACE ABOVE CEILING.

9 LIGHTING EMERGENCY TRANSFER RELAY — NO SCALE

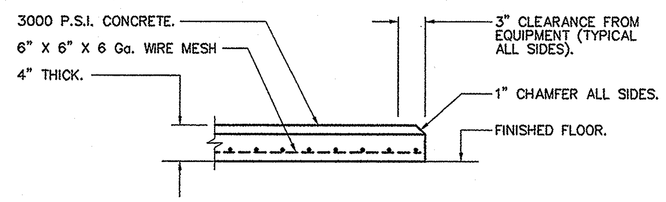

10 TYPICAL CONCRETE HOUSEKEEPING PAD — NO SCALE

11 NOT USED — NO SCALE

12 NOT USED — NO SCALE

RECEIVED JUN 17 2005 Grimm & Parker Architects

RECEIVED OCT 25 2004 GIPE ASSOC.

PROJECT RECORD DRAWINGS

college of southern maryland

Gipe Associates Inc.
Consulting Engineers
Baltimore, Maryland
Easton, Maryland
GAI WO# 01044

"THIS DRAWING AND THE DESIGN AND CONSTRUCTION FEATURES DISCLOSED ARE PROPRIETARY TO GIPE ASSOCIATES, INC. AND SHALL NOT BE ALTERED OR REUSED IN WHOLE OR IN PART WITHOUT THE EXPRESS WRITTEN PERMISSION OF GIPE ASSOCIATES, INC. Copyright © 2001"

Grimm and Parker Architects
1355 Beverly Rd.
Suite 105
McLean VA 22101
703.903.9100
703.903.9755 Fax

DETAILS
COLLEGE OF SOUTHERN MARYLAND WELLNESS CENTER
LA PLATA, MARYLAND

DATE	DESCRIPTION
12-12-01	DD SUBMITTAL
2-8-02	DGS SUBMISSION
4-11-02	BID SET
11/9/03	BID SET

© GRIMM AND PARKER,P.C. 2001

E6.1

DGS# - CC-09-MC99-311

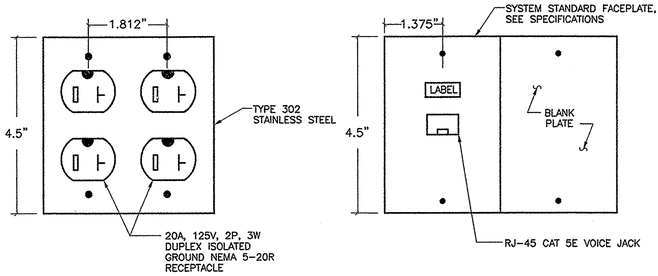

NOTE: IF THE SYMBOL "A" HAS A SUBSCRIPT SUCH AS "A_2" IT MEANS "X" NUMBER OF EIA/TIA CATEGORY 5 EIGHT CONDUCTOR TWISTED PAIR CABLE AND ASSOCIATED VOICE JACKS, COMPLETELY TERMINATED ON BOTH ENDS (IN THIS EXAMPLE TWO CABLES).

1 TYPE "A" – OUTLET

NO SCALE

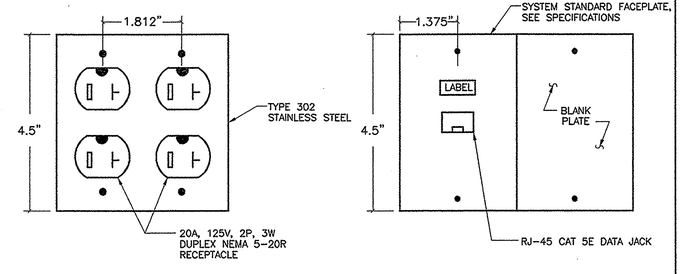

NOTE: IF THE SYMBOL "B" HAS A SUBSCRIPT SUCH AS "B_2" IT MEANS "X" NUMBER OF EIA/TIA CATEGORY 5 EIGHT CONDUCTOR TWISTED PAIR CABLE AND ASSSOCIATED DATA JACKS, COMPLETELY TERMINATED ON BOTH ENDS (IN THIS EXAMPLE TWO CABLES).

2 TYPE "B" – OUTLET

NO SCALE

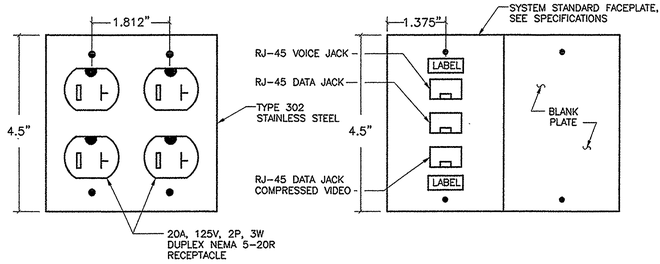

NOTE: IF THE SYMBOL "C" HAS A SUBSCRIPT SUCH AS "C_2" IT MEANS "X" NUMBER OF EIA/TIA CATEGORY 5 EIGHT CONDUCTOR TWISTED PAIR CABLE AND ASSOCIATED VOICE JACKS, COMPLETELY TERMINATED ON BOTH ENDS (IN THIS EXAMPLE TWO CABLES).

NOTE: THE COMPRESSED VIDEO CABLE IS TO BE TERMINATED EXACLTY LIKE THE DATA CABLE, BUT GROUPED SEPERATELY AT THE PATCH PANEL.

3 TYPE "C" – OUTLET

NO SCALE

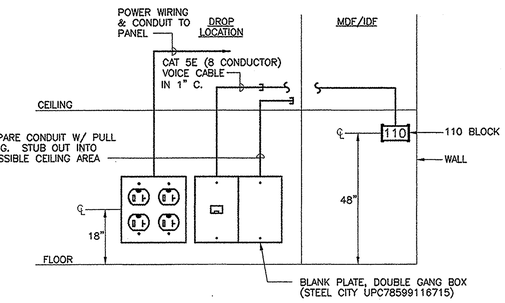

4 TYPICAL TYPE "A" OUTLET SCHEMATIC WIRING DIAGRAM

NO SCALE

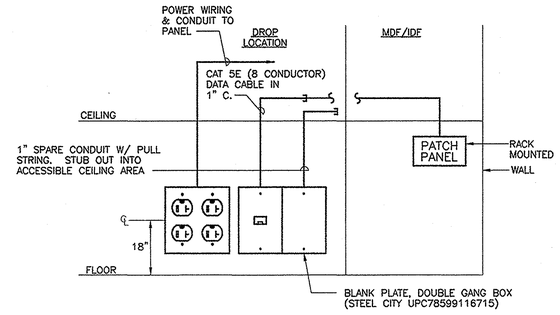

5 TYPICAL TYPE "B" OUTLET SCHEMATIC WIRING DIAGRAM

NO SCALE

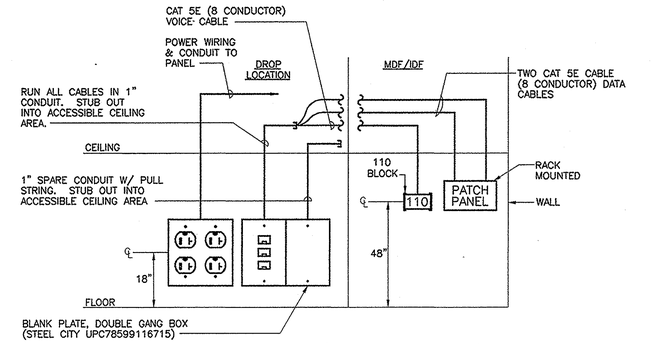

6 TYPICAL TYPE "C" OUTLET SCHEMATIC WIRING DIAGRAM

NO SCALE

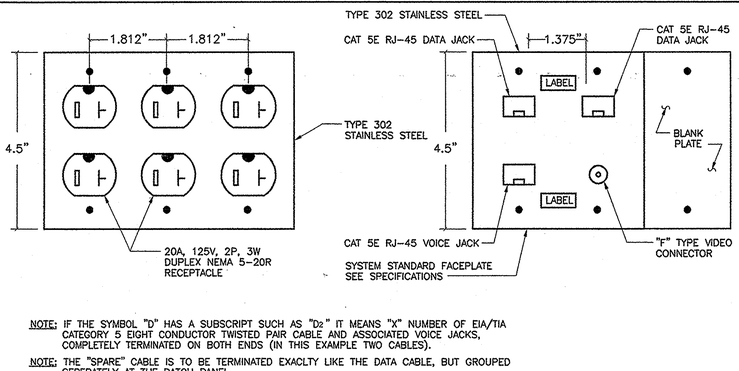

NOTE: IF THE SYMBOL "D" HAS A SUBSCRIPT SUCH AS "D_2" IT MEANS "X" NUMBER OF EIA/TIA CATEGORY 5 EIGHT CONDUCTOR TWISTED PAIR CABLE AND ASSOCIATED VOICE JACKS, COMPLETELY TERMINATED ON BOTH ENDS (IN THIS EXAMPLE TWO CABLES).

NOTE: THE "SPARE" CABLE IS TO BE TERMINATED EXACLTY LIKE THE DATA CABLE, BUT GROUPED SEPERATELY AT THE PATCH PANEL.

7 TYPE "D" – OUTLET

NO SCALE

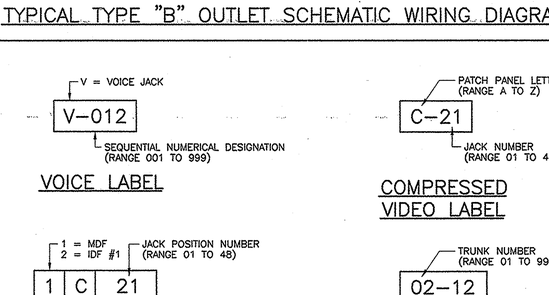

8 VOICE/DATA/VIDEO OUTLET LABELING SCHEME

NO SCALE

9 NOT USED

NO SCALE

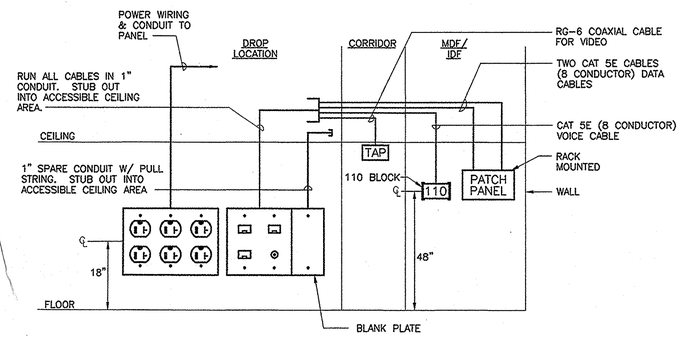

10 TYPICAL TYPE "D" OUTLET SCHEMATIC WIRING DIAGRAM

NO SCALE

11 NOT USED

NO SCALE

12 NOT USED

NO SCALE

RECEIVED
JUN 17 2005
Grimm & Parker Architects

RECEIVED
OCT 25 2004
GIPE ASSOC.

PROJECT RECORD DRAWINGS

college of southern maryland

Gipe Associates Inc.
Consulting Engineers
Baltimore, Maryland
Easton, Maryland
GAI WO# 01044

"THIS DRAWING AND THE DESIGN AND CONSTRUCTION FEATURES DISCLOSED ARE PROPRIETARY TO GIPE ASSOCIATES, INC. AND SHALL NOT BE ALTERED OR REUSED IN WHOLE OR IN PART WITHOUT THE EXPRESS WRITTEN PERMISSION OF GIPE ASSOCIATES, INC. Copyright © 2001"

1355 Beverly Rd.
Suite 105
McLean VA 22101
703.903.9100
703.903.9755 Fax

Grimm and Parker Architects

DETAILS

COLLEGE OF SOUTHERN MARYLAND WELLNESS CENTER
LA PLATA, MARYLAND

DATE	DESCRIPTION
12-12-01	DD SUBMITTAL
2-8-02	DGS SUBMISSION
4-11-02	BID SET
7/30/03	Bid Set

© GRIMM AND PARKER,P.C. 2001

E6.2

DGS# - CC-09-MC99-311

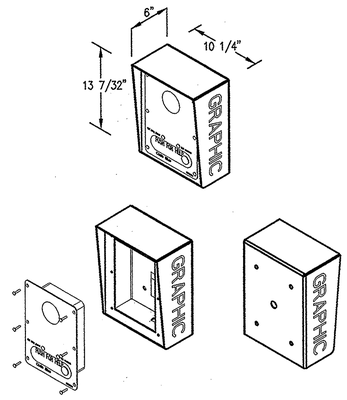

WALL MOUNTED UNIT
DIMENSIONS ARE APPROXIMATE
(FOR INFORMATION ONLY)

1 SECURITY SYSTEM EMERGENCY PHONE STATION

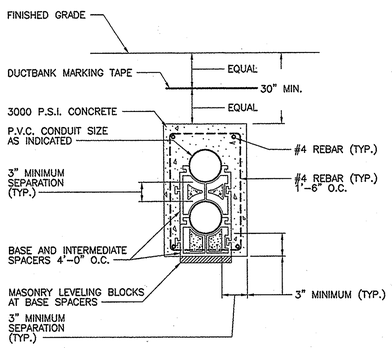

2-WAY CONCRETE ENCASED DUCT BANK
NO SCALE

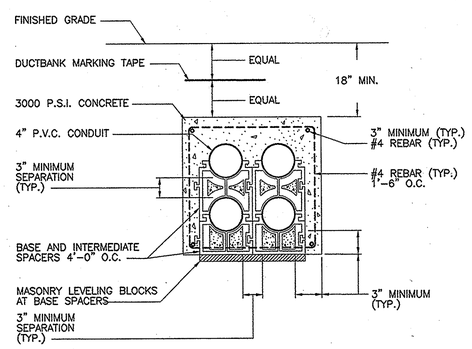

4-WAY CONCRETE ENCASED DUCT BANK
NO SCALE

3 DUCT BANK DETAILS

NO SCALE

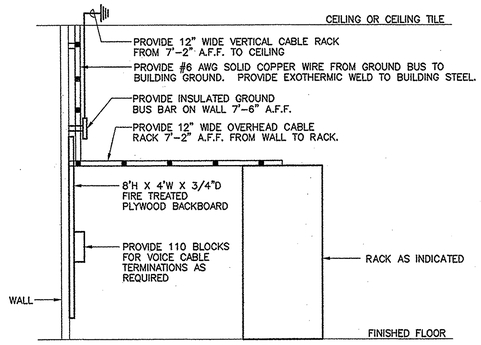

SIDE VIEW

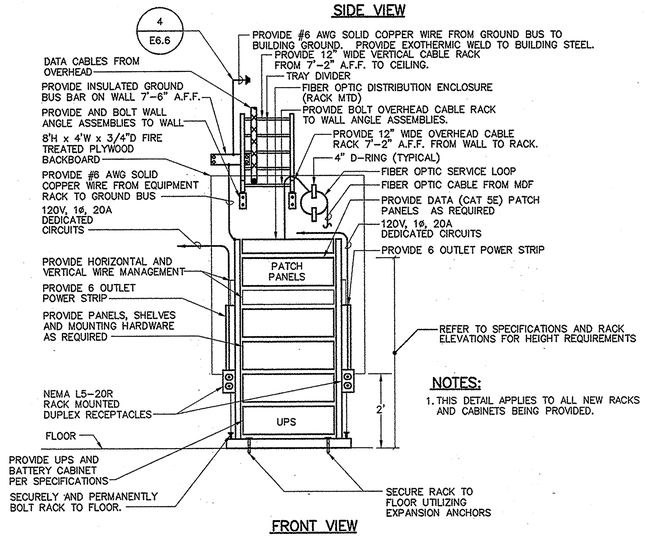

FRONT VIEW

NOTES:

1. THIS DETAIL APPLIES TO ALL NEW RACKS AND CABINETS BEING PROVIDED.

2 EQUIPMENT RACK DETAIL

NO SCALE

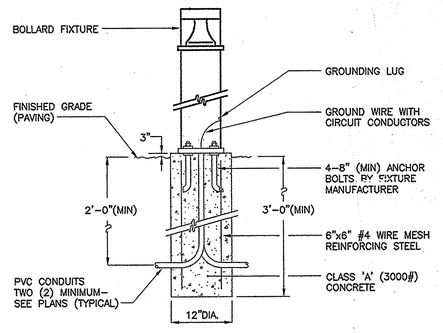

4 BOLLARD BASE DETAIL

NO SCALE

RECEIVED
JUN 17 2005

RECEIVED
OCT 25 2004
GIPE ASSOC.

PROJECT RECORD DRAWINGS

college of southern maryland
Gipe Associates Inc.
Consulting Engineers
Baltimore, Maryland
Easton, Maryland
GAI WO# 01044

"THIS DRAWING AND THE DESIGN AND CONSTRUCTION FEATURES DISCLOSED ARE PROPRIETARY TO GIPE ASSOCIATES, INC. AND SHALL NOT BE ALTERED OR REUSED IN WHOLE OR IN PART WITHOUT THE EXPRESSED WRITTEN PERMISSION OF GIPE ASSOCIATES, INC. Copyright © 2001"

1355 Beverly Rd.
Suite 105
McLean VA 22101
703.903.9100
703.903.9755 Fax

Grimm and Parker Architects

DETAILS
COLLEGE OF SOUTHERN MARYLAND WELLNESS CENTER
LA PLATA, MARYLAND

DATE	DESCRIPTION
12-12-01	DD SUBMITTAL
2-8-02	DGS SUBMISSION
4-11-02	BID SET
4-30-03	BID SET

© GRIMM AND PARKER,P.C. 2001

E6.3

DGS# - CC-09-MC99-311

DRAWING NOTES:

1. EXISTING 1/2" HS AND HR UP TO EXISTING UNIT HEATER.
2. REMOVE EXISTING 1/2" HS AND HR UP TO EXISTING UNIT HEATER.
3. EXISTING 1/2" HS AND HR UP TO EXISTING CONVECTOR.
4. RX FAN, SUPPORTS, AND ASSOCIATED CONTROLS.

GENERAL NOTES:

1. WHERE DUCTS ARE INDICATED TO BE REMOVED UP TO THE MAIN, REMOVE TAP AND REPAIR MAIN FLUSH WITH SHEET METAL. SEAL REPAIR.
2. WHERE PIPING IS INDICATED TO BE REMOVED BACK TO THE MAIN, REMOVE AND CAP AT THE TAKE-OFF.

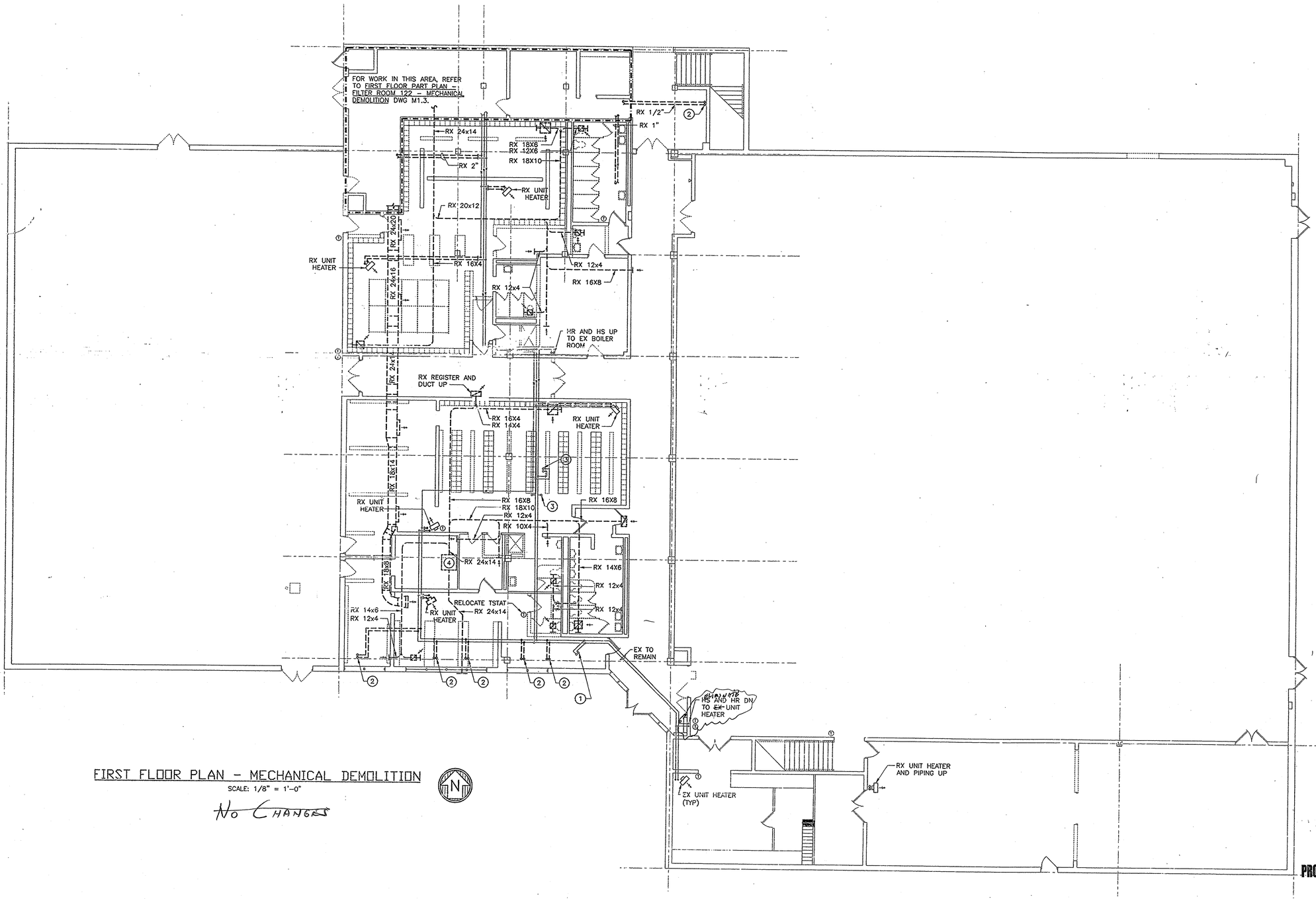

FIRST FLOOR PLAN - MECHANICAL DEMOLITION

SCALE: 1/8" = 1'-0"

No Changes

Qtr 1 : 878

Demo 30 days Total

RECEIVED JUN 17 2005 Grimm & Parker Architects

RECEIVED OCT 25 2004

PROJECT RECORD DRAWINGS

SCALE: 1/8" = 1'-0"

8 0 8 16

College of Southern Maryland

Gipe Associates Inc., Consulting Engineers
Baltimore, Maryland
Easton, Maryland
GAI WO# 01044

Grimm and Parker Architects
1355 Beverly Rd.
Suite 105
McLean VA 22101
703.903.9100
703.903.8755 Fax

"THIS DRAWING AND THE DESIGN AND CONSTRUCTION FEATURES DISCLOSED ARE PROPRIETARY TO GIPE ASSOCIATES, INC. AND SHALL NOT BE ALTERED OR REVISED IN WHOLE OR IN PART WITHOUT THE EXPRESS WRITTEN PERMISSION OF GIPE ASSOCIATES, INC. Copyright © 2001"

FIRST FLOOR PLAN
MECHANICAL DEMOLITION
COLLEGE OF SOUTHERN MARYLAND WELLNESS CENTER
LA PLATA, MARYLAND

DATE	DESCRIPTION
12-12-01	DD SUBMITTAL
2-8-02	DGS SUBMISSION
4-11-02	BID SET
7/30/03	BID SET

© GRIMM AND PARKER,P.C. 2001

M1.1

DGS# - CC-09-MC99-311

DRAWING NOTES:

1. RX 60x48 REGISTER.
2. FOR WORK IN THIS AREA, REFER TO SECOND FLOOR PART PLAN – CUSTODIAN ROOM 208 – MECHANICAL DEMOLITION DWG M1.3.
3. RX UNIT HEATER, PIPING, AND CONTROLS.
4. EX UNIT HEATER, PIPING, AND CONTROLS TO BE REUSED AND RELOCATED.

GENERATOR 204
EX FAN
STAIR 1 S-1
FOR WORK IN THIS AREA, REFER TO SECOND FLOOR PART PLAN – MECHANICAL, ROOM 203 – MECHANICAL DEMOLITION DWG M1.3.
RX 14x6
EX 5"
RX 30X24
PENETRATION THRU ROOF
RX 14x10
RX DIFFUSER (TYP)
RX 18x8
RX 14x8
RX 5"
RX 2"
RX 12x4
RX 14x8
RX 12x4
EX EXHAUST AIR UP TO FAN ON ROOF
RX 12x6
EX 12x6
EX UNIT CONVECTOR
EX 14x6
RX 12x8
RX 12x6
RX 8"D
RX REGISTER
RX HS AND HR
RX 14x10
RX 18"D
RX 14x10
RX 12x6
RX 18x18 ABOVE AND BELOW
EX DUCTWORK TO REMAIN (TYP)
RX 12x6 (TYP)
RX UNIT VENTILATOR. PROVIDE BLANK-OFF PANEL EQUAL TO EX LOUVER SIZE WITH 2" RIGID INSULATION (TYP OF 5)
ADD ALTERNATE No. 4
EX UNIT HEATER
EX CABINET UNIT HEATER
EX REFRIGERANT PIPING UP TO ACCU-2
EX REFRIGERANT PIPING UP TO ACCU-3
EX REFRIGERANT PIPING
RX 3/4"HS AND HR DN TO UNIT HEATER.
EX 3/4 HS AND HR
EX DUCTWORK TO REMAIN (TYP)
EX EXHAUST FAN
STAIR 2 S-2
POOL 146
GYM 155
ACTIVITY 157
MECHANICAL 220
FOR WORK IN THIS AREA, REFER TO SECOND FLOOR PART PLAN – MECHANICAL ROOM 220 – MECHANICAL DEMOLITION DWG M1.3.

SECOND FLOOR PLAN – MECHANICAL DEMOLITION

SCALE: 1/8" = 1'-0"

NO CHANGES

RECEIVED
JUN 17 2005
Grimm & Parker Architects

PROJECT RECORD DRAWINGS

SCALE: 1/8" = 1'-0"

8 0 8 16

RECEIVED
OCT 25 2004

college of southern maryland

Gipe Associates Inc.
Consulting Engineers
Baltimore, Maryland
Easton, Maryland
GAI W.O.# 01044

"THIS DRAWING AND THE DESIGN AND CONSTRUCTION FEATURES DISCLOSED ARE PROPRIETARY TO GIPE ASSOCIATES, INC., AND SHALL NOT BE ALTERED OR REUSED IN WHOLE OR IN PART WITHOUT THE EXPRESS WRITTEN PERMISSION OF GIPE ASSOCIATES, INC. Copyright © 2001"

1355 Beverly Rd.
Suite 115
McLean VA 22101
703.903.9100
703.903.9755 Fax

Grimm and Parker Architects

SECOND FLOOR PLAN
MECHANICAL DEMOLITION
COLLEGE OF SOUTHERN MARYLAND WELLNESS CENTER
LA PLATA, MARYLAND

DATE	DESCRIPTION
12-12-01	DD SUBMITTAL
2-8-02	DGS SUBMISSION
4-11-02	BID SET
4/30/02	BID SET

© GRIMM AND PARKER,P.C.

M1.2

DGS#

DRAWING NOTES:

1. RX 72x18 RETURN AIR GRILLE.
2. RX EXHAUST AIR REGISTER.
3. RX AIR HANDLING UNIT, PIPING, SUPPORT, AND ASSOCIATED CONTROLS AND TURN OVER TO THE OWNER.
4. RX FAN, SUPPORTS, AND ASSOCIATED CONTROLS.
5. RX DEHUMIDIFICATION UNIT, PIPING, SUPPORT, AND ASSOCIATED CONTROLS.
6. RX POOL WATER HEAT EXCHANGER, PIPING, SUPPORT, AND ASSOCIATED CONTROLS.
7. RX AIR HANDLING UNIT, PIPING, SUPPORTS, AND ASSOCIATED CONTROLS UNDER ADD ALTERNATE No. 4.
8. RX COIL, SUPPORTS, PIPING, AND CONTROLS UNDER ADD ALTERNATE No. 4.

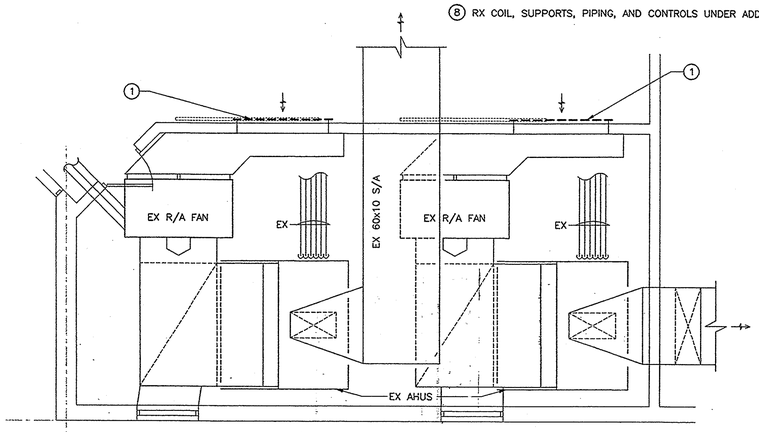

SECOND FLOOR PART PLAN – MECHANICAL ROOM 220 – MECHANICAL DEMOLITION

SCALE: 1/4" = 1'-0"

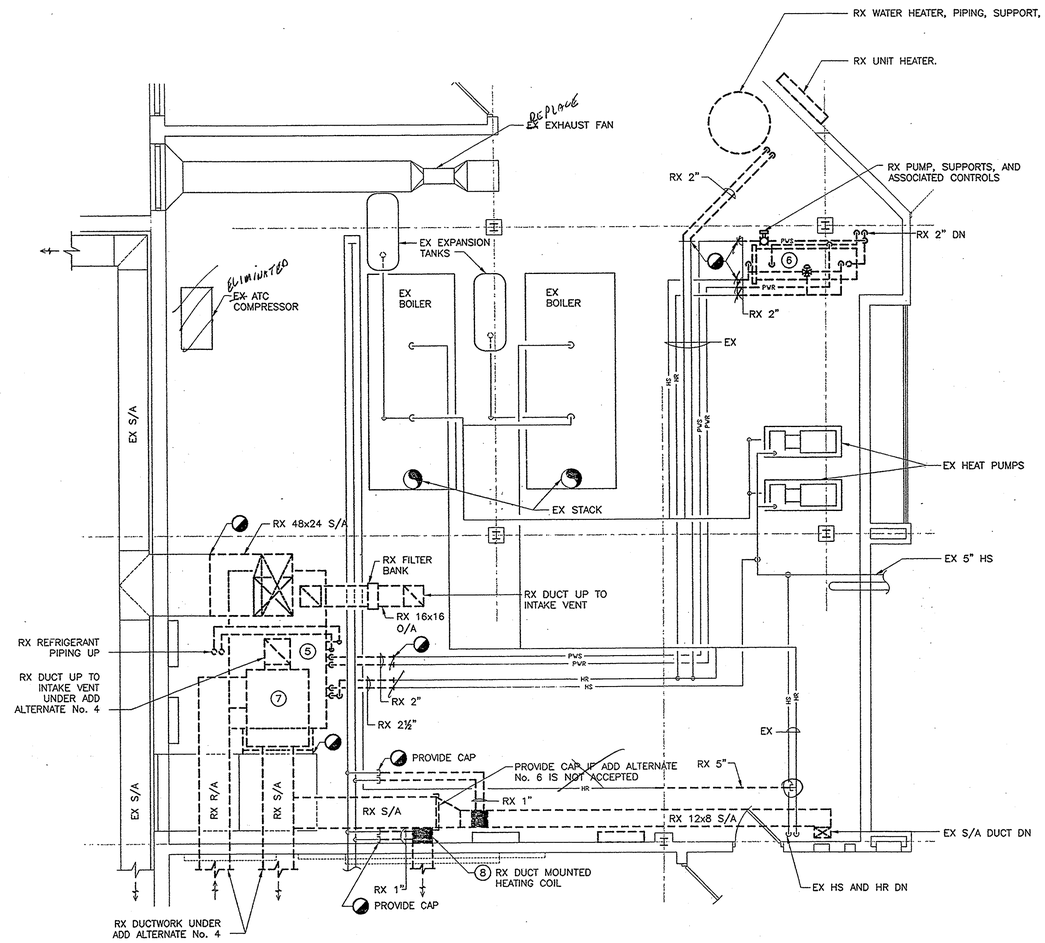

SECOND FLOOR PART PLAN – MECHANICAL ROOM 203 – MECHANICAL DEMOLITION

SCALE: 1/4" = 1'-0"

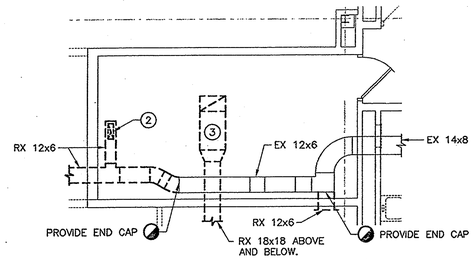

SECOND FLOOR PART PLAN – CUSTODIAN ROOM 208 – MECHANICAL DEMOLITION

SCALE: 1/4" = 1'-0"

No Changes

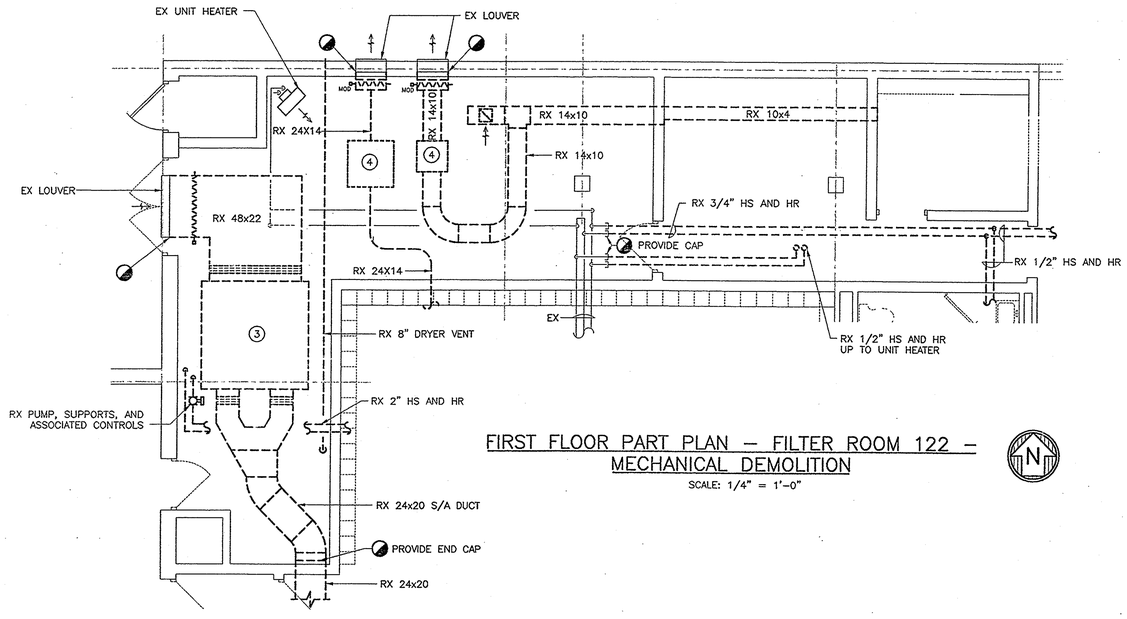

FIRST FLOOR PART PLAN – FILTER ROOM 122 – MECHANICAL DEMOLITION

SCALE: 1/4" = 1'-0"

RECEIVED
JUN 17 2005

PROJECT RECORD DRAWINGS

SCALE: 1/4" = 1'-0"

4 0 4 8

OCT 25 2004
DGS # CC-09-MGS

College of Southern Md

Gipe Associates Inc.
Consulting Engineers
Baltimore, Maryland
Easton, Maryland
GAI WO# 01044

"THIS DRAWING AND THE DESIGN AND CONSTRUCTION FEATURES DISCLOSED ARE PROPRIETARY TO GIPE ASSOCIATES, INC. AND SHALL NOT BE ALTERED OR RELEASED, WHOLE OR IN PART WITHOUT THE EXPRESS WRITTEN PERMISSION OF GIPE ASSOCIATES, INC. Copyright © 2001"

Grimm and Parker Architects
1355 Beverly Rd.
Suite 105
McLean VA 22101
703.903.9100
703.903.9755 Fax

PART PLANS - MECHANICAL ROOMS
MECHANICAL DEMOLITION
COLLEGE OF SOUTHERN MARYLAND WELLNESS CENTER
LA PLATA, MARYLAND

DATE	DESCRIPTION
12-12-01	DD SUBMITTAL
2-8-02	DGS SUBMISSION
4-11-02	BID SET
4-30-03	BID SET

© GRIMM AND PARKER,P.C. 2001

M1.3

GENERAL NOTES:

1. REMOVE ALL STRUCTURAL SYSTEMS FOR EQUIPMENT BEING REMOVED UNLESS OTHERWISE NOTED. REPAIR ROOF STRUCTURE TO MATCH EXISTING.
2. REMOVE REFRIGERANT PIPING TO CONDENSING UNITS. REPAIR ROOF STRUCTURE TO MATCH EXISTING.

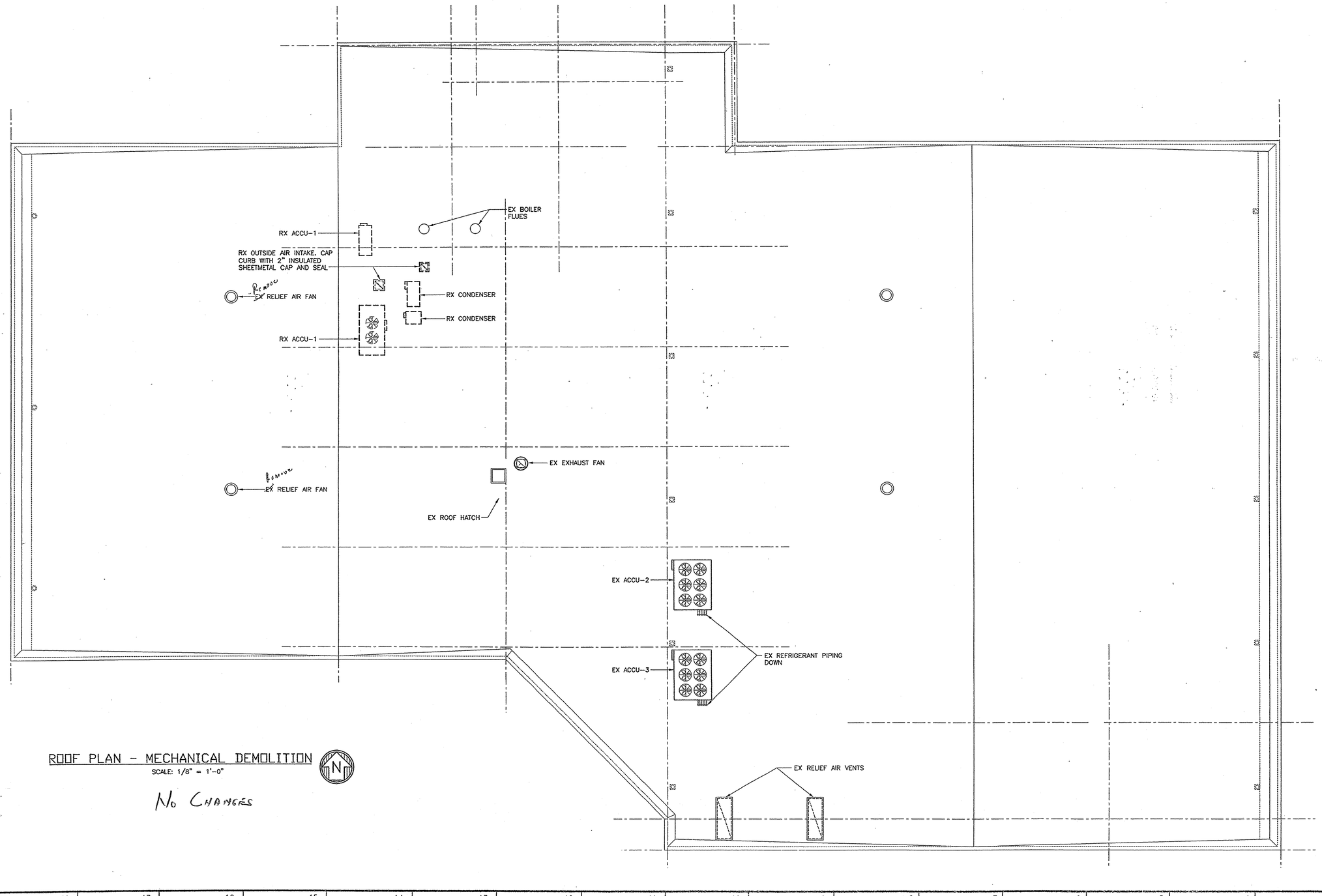

ROOF PLAN - MECHANICAL DEMOLITION

SCALE: 1/8" = 1'-0"

No Changes

PROJECT RECORD DRAWINGS

RECEIVED JUN 17 2005

SCALE: 1/8" = 1'-0"

8 0 8 16

RECEIVED 1 OCT 25 2004

College of Southern Maryland

Gipe Associates Inc.
Consulting Engineers
Baltimore, Maryland
Easton, Maryland
GAI WO# 01044

"THIS DRAWING AND THE DESIGN AND CONSTRUCTION FEATURES DISCLOSED ARE PROPRIETARY TO GIPE ASSOCIATES, INC. AND SHALL NOT BE ALTERED OR REUSED IN WHOLE OR IN PART WITHOUT THE EXPRESS WRITTEN PERMISSION OF GIPE ASSOCIATES, INC. Copyright © 2001"

1355 Beverly Rd.
Suite 105
McLean VA 22101
703.903.9100
703.903.9755 Fax

Grimm + Parker Architects

ROOF PLAN
MECHANICAL DEMOLITION
COLLEGE OF SOUTHERN MARYLAND WELLNESS CENTER
LA PLATA, MARYLAND

DATE	DESCRIPTION
12-12-01	DD SUBMITTAL
2-8-02	DGS SUBMISSION
4-11-02	BID SET
4/30/03	BID SET

© GRIMM AND PARKER, P.C. 2002

M1.4

DGS# CC-09-MC99-31

DRAWING NOTES:

1. DUCTLESS SPLIT A/C SYSTEM No. 1 EVAPORATOR UNIT. INSTALL ABOVE DOOR OPENING. PROVIDE REFRIGERANT PIPING TO CONDENSING UNIT ON ROOF.
2. DUCTLESS SPLIT A/C SYSTEM No. 3 EVAPORATOR UNIT. INSTALL ABOVE DOOR OPENING. PROVIDE REFRIGERANT PIPING TO CONDENSING UNIT ON ROOF.
3. DUCTLESS SPLIT A/C SYSTEM No. 2 EVAPORATOR UNIT. INSTALL ABOVE DOOR OPENING. PROVIDE REFRIGERNAT PIPING TO CONDENSING UNIT ON ROOF.
4. EX 1/2" HS AND HR UP TO EX CONVECTORS.
5. 10"D DN TO DRYER. MAKE FINAL CONNECTION.
6. 12x36 E/A UP AND 3"HR AND HS UP
7. PROVIDE T2 ON EACH SIDE OF WALL

FOR WORK IN THIS AREA, REFER TO FIRST FLOOR PART PLAN – FILTER ROOM 122 – MECHANICAL NEW WORK DWG M2.3.

OPEN TO ABOVE

12"D DRYER INTAKE UP
10"D DRYER VENT UP
12x36 UP

10"D DRYER VENT

10x10 E/A UP

1" HS AND HR UP

EX 1/2"HS AND HR UP TO UNIT HEATER

HS AND HR DN TO EX UNIT HEATER

EX TSTAT (TYP)

EX UNIT HEATER (TYP)

PROVIDE T1 GRILLES ON EACH SIDE OF WALL

FIRST FLOOR PLAN – MECHANICAL NEW WORK

SCALE: 1/8" = 1'-0"

RECEIVED
JUN 17 2005
Grimm & Parker Architects

RECEIVED
OCT 25 2004
GIPE ASSOC.

PROJECT RECORD DRAWINGS

SCALE: 1/8" = 1'-0"

8 0 8 16

SCOTT

college of southern maryland

Gipe Associates Inc.
Consulting Engineers
Baltimore, Maryland
Easton, Maryland
GAI WO# 01044

"THIS DRAWING AND THE DESIGN AND CONSTRUCTION FEATURES DISCLOSED ARE PROPRIETARY TO GIPE ASSOCIATES AND SHALL NOT BE ASSIGNED OR RELEASED, WHOLLY OR IN PART WITHOUT THE EXPRESS WRITTEN PERMISSION OF GIPE ASSOCIATES, INC. Copyright © 2001"

1355 Beverly Rd.
Suite 105
McLean VA 22101
703.903.9100
703.903.9755 Fax

Grimm & Parker Architects

FIRST FLOOR PLAN
MECHANICAL NEW WORK
COLLEGE OF SOUTHERN MARYLAND WELLNESS CENTER
LA PLATA, MARYLAND

DATE	DESCRIPTION
12-12-01	DD SUBMITTAL
2-8-02	DGS SUBMISSION
4-11-02	BID SET
4-30-03	BID SET
9/27/04	AS-Built

© GRIMM AND PARKER,P.C. 2001

M2.1

DGS# - CC-09-MC99-311

DRAWING NOTES:

1. DUCTLESS SPLIT A/C SYSTEM No. 1 EVAPORATOR UNIT. INSTALL ABOVE DOOR OPENING. PROVIDE REFRIGERANT PIPING TO CONDENSING UNIT ON ROOF.
2. DUCTLESS SPLIT A/C SYSTEM No. 3 EVAPORATOR UNIT. INSTALL ABOVE DOOR OPENING. PROVIDE REFRIGERANT PIPING TO CONDENSING UNIT ON ROOF.
3. DUCTLESS SPLIT A/C SYSTEM No. 2 EVAPORATOR UNIT. INSTALL ABOVE DOOR OPENING. PROVIDE REFRIGERNAT PIPING TO CONDENSING UNIT ON ROOF.
4. EX 1/2" HS AND HR UP TO EX CONVECTORS.
5. 10"D DN TO DRYER. MAKE FINAL CONNECTION.
6. 12x36 E/A UP AND 3"HR AND HS UP
7. PROVIDE T2 ON EACH SIDE OF WALL

FOR WORK IN THIS AREA, REFER TO FIRST FLOOR PART PLAN – FILTER ROOM 122 – MECHANICAL NEW WORK DWG M2.3.

8x8 UP
12x8
8x8
OPEN TO ABOVE
12"D DRYER INTAKE UP
10"D DRYER VENT UP
12x36 UP
10"D DRYER VENT
HC-22
HC-21
HC-20
HC-23
HC-4
HC-5
HC-6
HC-7
14x10
16x10
20X6
16x10
12x8
12x4
18X6
12x9
18x18 UP
13x13 UP
12x5
10x6
10x10 E/A UP
1" HS AND HR UP
EX 1/2"HS AND HR UP TO UNIT HEATER
HS AND HR DN TO EX UNIT HEATER
EX TSTAT (TYP)
EX UNIT HEATER (TYP)
PROVIDE T1 GRILLES ON EACH SIDE OF WALL
(2) 6x14 UP

FIRST FLOOR PLAN – MECHANICAL NEW WORK

SCALE: 1/8" = 1'-0"

SEE ATTACHED FOR SHEEMETAL CHANGES

N

PROJECT RECORD DRAWINGS

RECEIVED JUN 17 2005

RECEIVED OCT 25 2004

SCALE: 1/8" = 1'-0"

8 0 8 16

college of southern maryland

Gipe Associates Inc.
Consulting Engineers
Baltimore, Maryland
Easton, Maryland

GAI WO# 01044

"THIS DRAWING AND THE DESIGN AND CONSTRUCTION FEATURES DISCLOSED ARE PROPRIETARY TO GIPE ASSOCIATES, INC. AND SHALL NOT BE ALTERED OR REUSED IN WHOLE OR IN PART WITHOUT THE EXPRESS WRITTEN PERMISSION OF GIPE ASSOCIATES, INC. Copyright © 2001"

1355 Beverly Rd.
Suite 105
McLean VA 22101
703.903.9100
703.903.9755 Fax

Grimm and Parker Architects

FIRST FLOOR PLAN
MECHANICAL NEW WORK
COLLEGE OF SOUTHERN MARYLAND WELLNESS CENTER
LA PLATA, MARYLAND

DATE	DESCRIPTION
12-12-01	DD SUBMITTAL
2-8-02	DGS SUBMISSION
4-11-02	BID SET
4-30-03	BID SET

© GRIMM AND PARKER,P.C. 2001

M2.1

DGS# - CC-09-MC99-31

DRAWING NOTES:

1. SIDE SERVICE FILTER HOUSING WITH (6) 24x24 FILTERS. OVERALL FILTER SIZE SHALL BE 48x72.
2. 26x46 O/A UP TO LOUVERED ROOF INTAKE VENT.
3. REFRIGERANT PIPING UP TO ACCU-5.
4. REFRIGERANT PIPING UP TO ACCU-6.
5. 28x14 OED WITH RELIEF AIR MOD.
6. 46x22 R/A DN TO REGISTER.
7. 12x12 E/A DN TO REGISTER AND UP TO FAN-8.
8. NOT USED.
9. PROVIDE CAP ONLY DOWNSTREAM OF DUCT TAP IF ADD ALTERNATE No. 1 IS NOT ACCEPTED.
10. CONCESSION IS ADD ALTERNATE No. 1. UNLESS OTHERWISE INDICATED, PROVIDE WORK AS INDICATED WHETHER ALTERNATE No. 1 IS ACCEPTED OR NOT.
11. FLARE DUCT TO 16x6 IN ELBOW.
12. MOVE EX CONVECTOR WEST TO CLEAR DOOR AND REPIPE FROM BELOW. EXTEND EX CONTROLS TO LOCATION INDICATED.
13. REPLACE EX 72x48 RETURN AIR REGISTER.

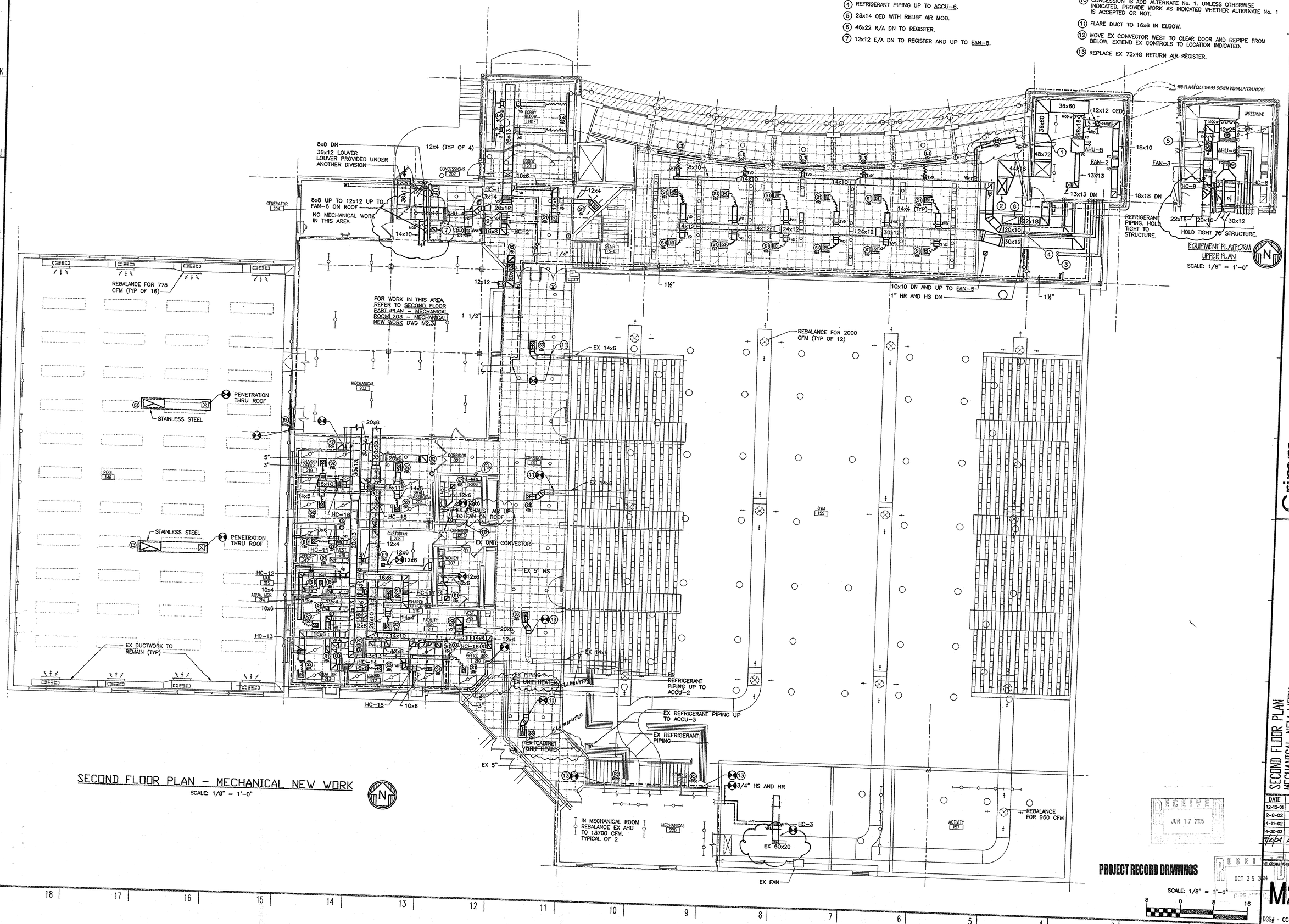

SECOND FLOOR PLAN - MECHANICAL NEW WORK

SCALE: 1/8" = 1'-0"

EQUIPMENT PLATFORM UPPER PLAN

SCALE: 1/8" = 1'-0"

RECEIVED JUN 17 2005

RECEIVED OCT 25 2004

PROJECT RECORD DRAWINGS

SCALE: 1/8" = 1'-0"

college of southern maryland

Gipe Associates Inc.
Consulting Engineers
Baltimore, Maryland
Easton, Maryland
GAI WO# 01044

"THIS DRAWING AND THE DESIGN AND CONSTRUCTION FEATURES DISCLOSED ARE PROPRIETARY TO GIPE ASSOCIATES, INC. AND SHALL NOT BE ALTERED OR REUSED IN WHOLE OR IN PART WITHOUT THE EXPRESS WRITTEN PERMISSION OF GIPE ASSOCIATES, INC. Copyright © 2001"

1355 Beverly Rd.
Suite 105
McLean VA 22101
703.903.9100
703.903.9755 Fax

Grimm and Parker Architects

SECOND FLOOR PLAN
MECHANICAL NEW WORK
COLLEGE OF SOUTHERN MARYLAND WELLNESS CENTER
LA PLATA, MARYLAND

DATE	DESCRIPTION
12-12-01	DD SUBMITTAL
2-8-02	DGS SUBMISSION
4-11-02	BID SET
4-30-03	BID SET
9/29/04	As-Builts

©GRIMM AND PARKER,P.C. 2001

M2.2

DGS# - CC-09-MC99-

DRAWING NOTES:

1. SIDE SERVICE FILTER HOUSING WITH (6) 24x24 FILTERS. OVERALL FILTER SIZE SHALL BE 48x72.
2. 26x46 O/A UP TO LOUVERED ROOF INTAKE VENT.
3. REFRIGERANT PIPING UP TO ACCU-5.
4. REFRIGERANT PIPING UP TO ACCU-6.
5. 28x14 OED WITH RELIEF AIR MOD.
6. 46x22 R/A DN TO REGISTER.
7. 12x12 E/A DN TO REGISTER AND UP TO FAN-8.
8. NOT USED.
9. PROVIDE CAP ONLY DOWNSTREAM OF DUCT TAP IF ADD ALTERNATE No. 1 IS NOT ACCEPTED.
10. CONCESSION IS ADD ALTERNATE No. 1. UNLESS OTHERWISE INDICATED, PROVIDE WORK AS INDICATED WHETHER ALTERNATE No. 1 IS ACCEPTED OR NOT.
11. FLARE DUCT TO 16x6 IN ELBOW.
12. MOVE EX CONVECTOR WEST TO CLEAR DOOR AND REPIPE FROM BELOW. EXTEND EX CONTROLS TO LOCATION INDICATED.
13. REPLACE EX 72x48 RETURN AIR REGISTER.

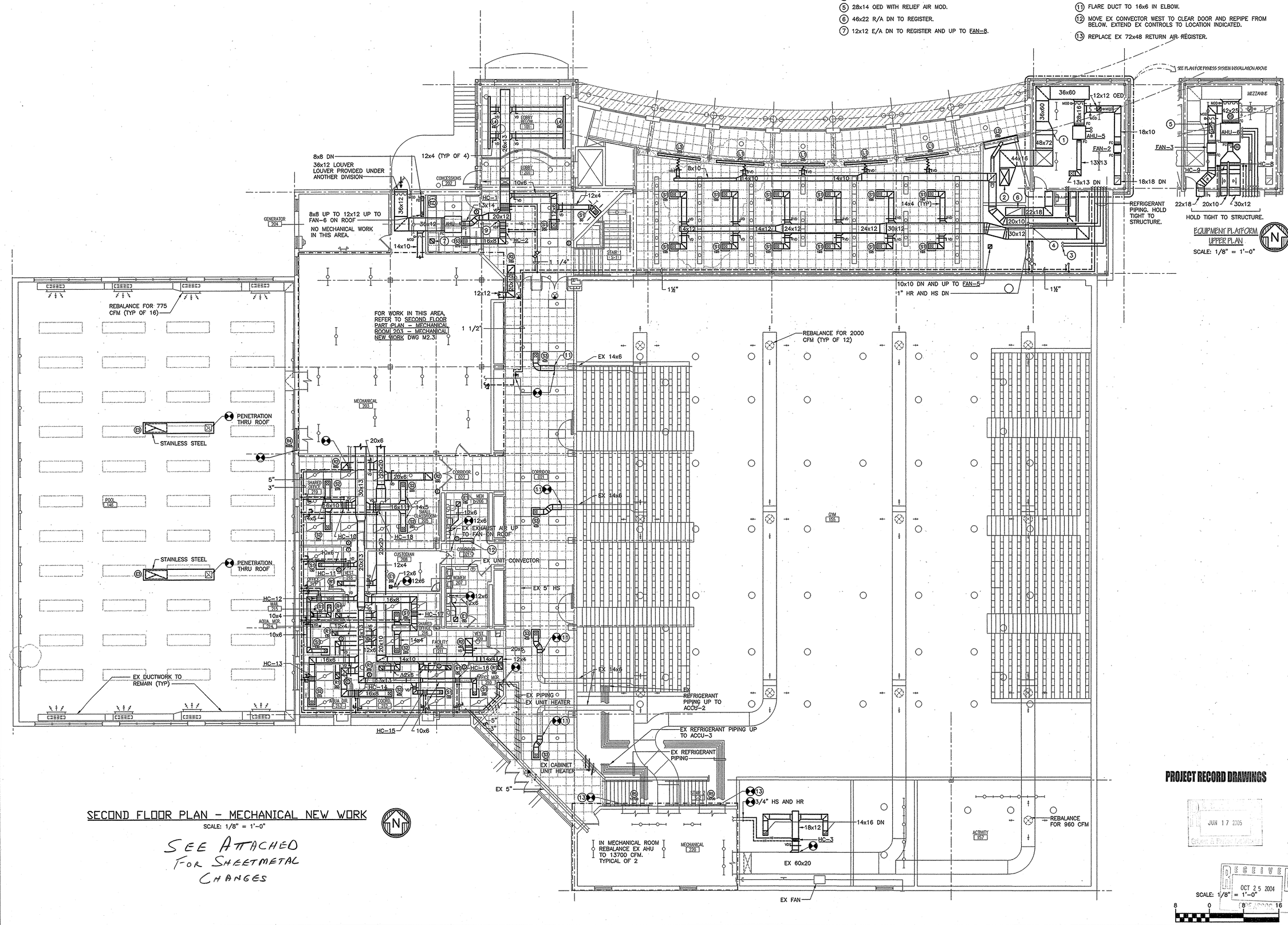

SECOND FLOOR PLAN - MECHANICAL NEW WORK

SCALE: 1/8" = 1'-0"

SEE ATTACHED FOR SHEETMETAL CHANGES

EQUIPMENT PLATFORM UPPER PLAN

SCALE: 1/8" = 1'-0"

PROJECT RECORD DRAWINGS

JUN 17 2005

RECEIVED OCT 25 2004

SCALE: 1/8" = 1'-0"

8 0 8" 16

College of Southern Maryland
Gipe Associates Inc. Consulting Engineers
Baltimore, Maryland
Easton, Maryland
GAI WO# 01044

"THIS DRAWING AND THE DESIGN AND CONSTRUCTION FEATURES DISCLOSED ARE PROPRIETARY TO GIPE ASSOCIATES, INC. AND SHALL NOT BE ALTERED OR REUSED IN WHOLE OR IN PART WITHOUT THE EXPRESS WRITTEN PERMISSION OF GIPE ASSOCIATES, INC. Copyright © 2001"

1325 Beverly Rd.
Suite 105
McLean VA 22101
703.903.9100
703.903.9755 Fax

Grimm and Parker Architects

SECOND FLOOR PLAN
MECHANICAL NEW WORK
COLLEGE OF SOUTHERN MARYLAND WELLNESS CENTER
LA PLATA, MARYLAND

DATE	DESCRIPTION
12-12-01	DD SUBMITTAL
2-8-02	DGS SUBMISSION
4-11-02	BID SET
4-30-03	BID SET

© GRIMM AND PARKER,P.C. 2001

M2.2

DGS# - CC-09-MC99-311

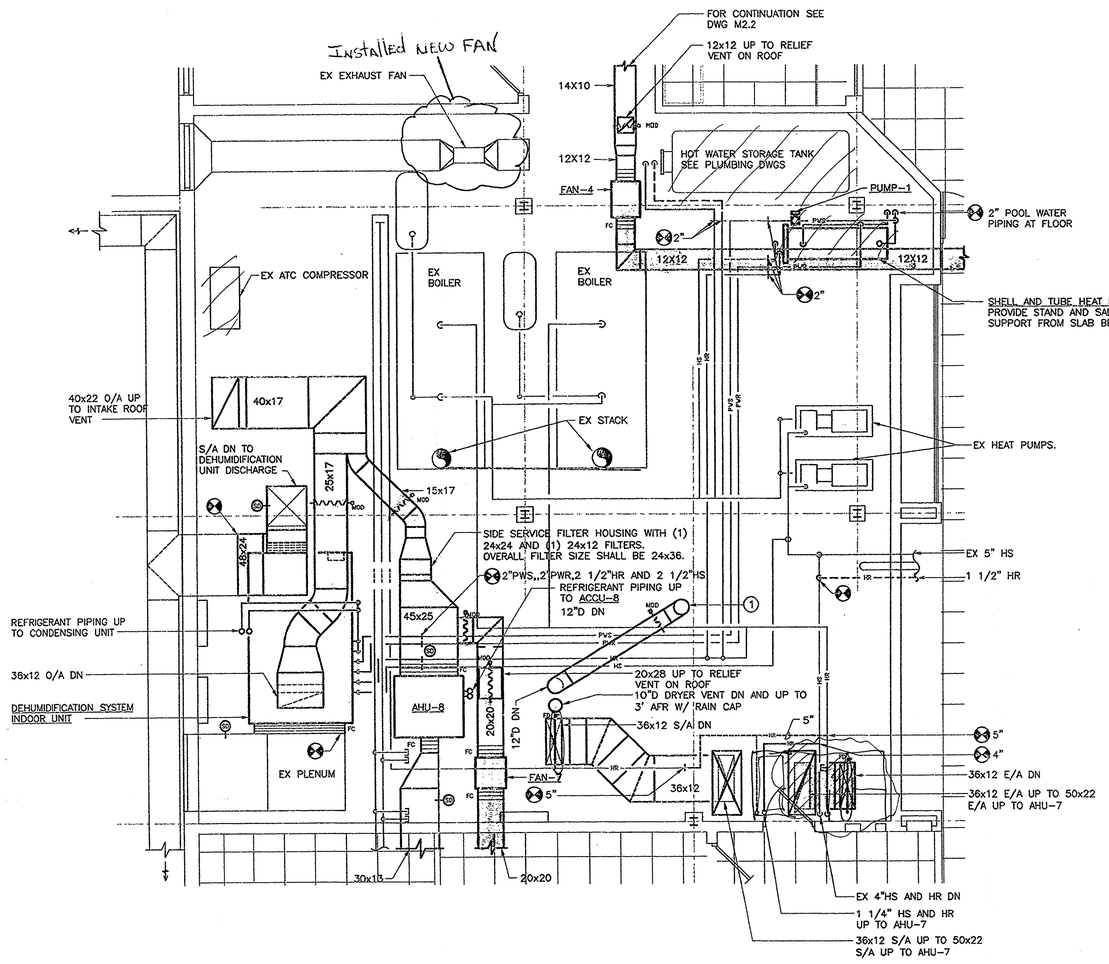

SECOND FLOOR PART PLAN - MECHANICAL ROOM 203 - MECHANICAL NEW WORK

SCALE: 1/4" = 1'-0"

DRAWING NOTES:

1. 12"D UP THRU ROOF TO GOOSENECK. BOTTOM OF GOOSENECK SHALL BE 18" ABOVE FINISHED ROOF.

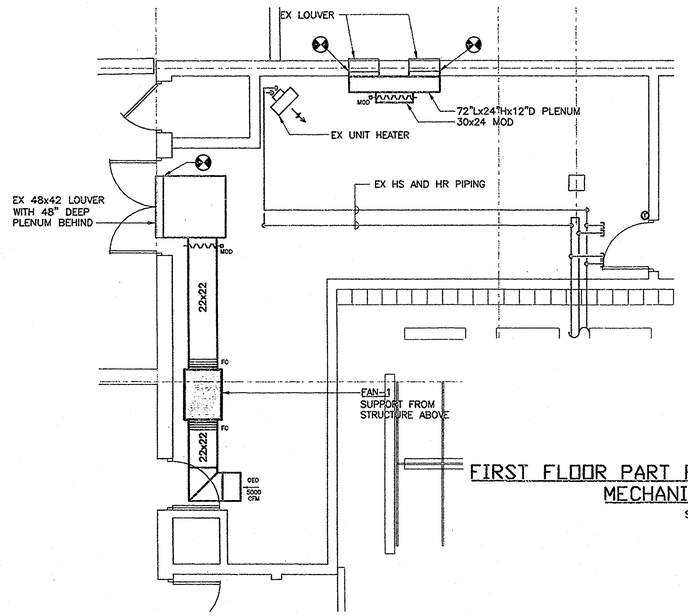

FIRST FLOOR PART PLAN - FILTER ROOM 122 - MECHANICAL NEW WORK

SCALE: 1/4" = 1'-0"

RECEIVED JUN 17 2005 Grimm & Parker Architects

RECEIVED OCT 25 2004

PROJECT RECORD DRAWINGS

SCALE: 1/4" = 1'-0"

college of southern maryland

Gipe Associates Inc.
Consulting Engineers
Baltimore, Maryland
Easton, Maryland
GAI WO# 01044

"THIS DRAWING AND THE DESIGN AND CONSTRUCTION FEATURES DISCLOSED ARE PROPRIETARY TO GIPE ASSOCIATES INC. AND SHALL NOT BE ASSIGNED OR INCLUDED, WHOLE OR IN PART WITHOUT THE EXPRESS WRITTEN PERMISSION OF GIPE ASSOCIATES, INC. Copyright © 2001"

1355 Beverly Rd.
Suite 105
McLean VA 22101
703.903.9100
703.903.9755 Fax

Grimm and Parker Architects

PART PLANS - MECHANICAL ROOMS
MECHANICAL NEW WORK
COLLEGE OF SOUTHERN MARYLAND WELLNESS CENTER
LA PLATA, WARYLAND

DATE	DESCRIPTION
12-12-01	DD SUBMITTAL
2-8-02	DGS SUBMISSION
4-11-02	BID SET
4-30-03	BID SET
7/29/04	As-Builts

© GRIMM AND PARKER,P.C. 2001

M2.3

DGS# - CC-09-MC99-311

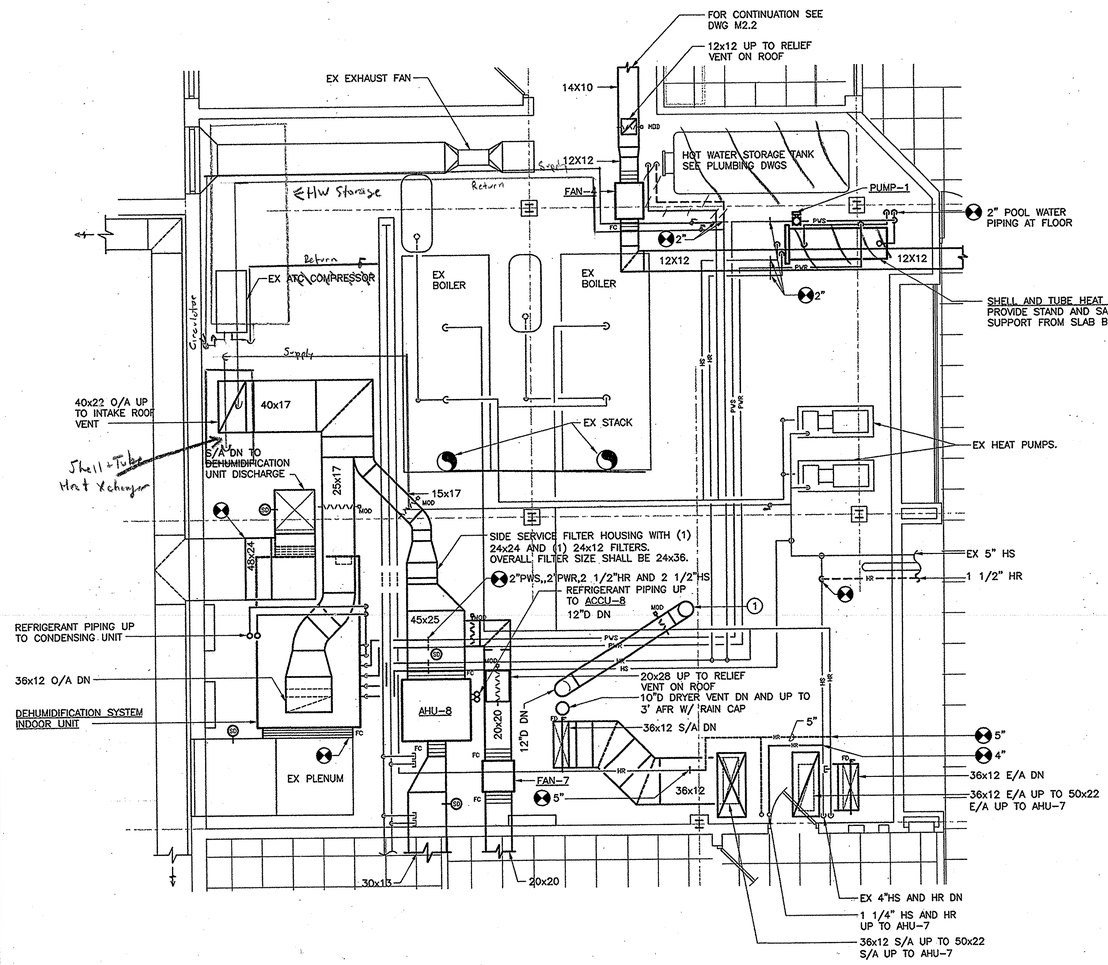

SECOND FLOOR PART PLAN - MECHANICAL ROOM 203 - MECHANICAL NEW WORK

SCALE: 1/4" = 1'-0"

SEE ATTACHED FOR SHEETMETAL CHANGES

DRAWING NOTES:

1. 12"D UP THRU ROOF TO GOOSENECK. BOTTOM OF GOOSENECK SHALL BE 18" ABOVE FINISHED ROOF.

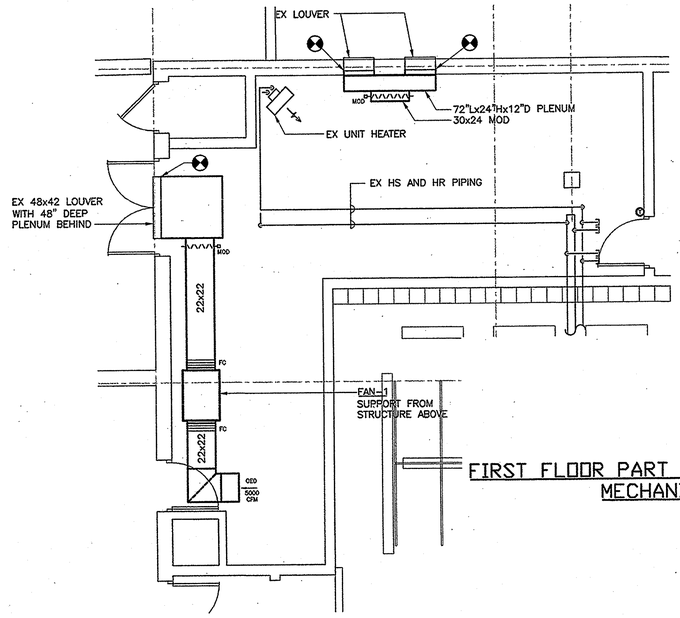

FIRST FLOOR PART PLAN - FILTER ROOM 122 - MECHANICAL NEW WORK

SCALE: 1/4" = 1'-0"

PROJECT RECORD DRAWINGS

RECEIVED JUN 17 2005 Grimm & Parker Architects

RECEIVED OCT 25 2004

SCALE: 1/4" = 1'-0"

4 0 4 8

College of Southern Maryland

Gipe Associates Inc. Consulting Engineers
Baltimore, Maryland
Easton, Maryland
GAI WO# 01044

"THIS DRAWING AND THE DESIGN AND CONSTRUCTION FEATURES DISCLOSED ARE PROPRIETARY TO GIPE ASSOCIATES, INC. AND SHALL NOT BE ALTERED OR REUSED IN WHOLE OR IN PART WITHOUT THE EXPRESS WRITTEN PERMISSION OF GIPE ASSOCIATES, INC. Copyright © 2001"

1355 Beverly Rd.
Suite 105
McLean VA 22101
703.903.9100
703.903.9755 Fax

Grimm and Parker Architects

PART PLANS - MECHANICAL ROOMS
MECHANICAL NEW WORK
COLLEGE OF SOUTHERN MARYLAND WELLNESS CENTER
LA PLATA, MARYLAND

DATE	DESCRIPTION
12-12-01	DD SUBMITTAL
2-8-02	DGS SUBMISSION
4-11-02	BID SET
4-30-03	BID SET

© GRIMM AND PARKER,P.C. 2001

M2.3

DGS# - CC-09-MC99-311

DUCTLESS SPLIT A/C SYSTEM No.3 CONDENSER
SUPPORT FROM PREFABRICATED RESIN ROOF SUPPORT

MOVED 1 BACK TO FROM ROOF EDGE

FAN-6
SUPPORT FROM ROOF CURB

FAN-8
SUPPORT FROM ROOF CURB

ACCU-4
SUPPORT FROM ROOF CURB

LOUVERED ROOF RELIEF VENT
750 CFM @ 0.10"SP
12x12 THROAT, 720 FPM
26"Wx26"Lx12.25"H
GREENHECK MODEL WIH

LOUVERED ROOF INTAKE VENT
4355 CFM @ 0.10"SP
22x40 THROAT, 715 FPM
36"Wx54"Lx12.25"H
GREENHECK MODEL WIH

4'-0" TYP.

EXISTING BOILER FLUES

EX CURBS W/ NEW CAPS

LOUVERED ROOF RELIEF VENT
2800 CFM @ 0.10"SP
20x28 THROAT, 1720 FPM
34"Wx42"Lx12.25"H
GREENHECK MODEL WIH

DRYER INTAKE EXHAUST

~~EX~~ RELIEF AIR FAN

AHU-7
SUPPORT FROM ROOF CURB

ACCU-8
SUPPORT FROM ROOF CURB

DEHUMIDIFICATION SYSTEM
CONDENSING UNIT
SUPPORT FROM ROOF CURB

DUCTLESS SPLIT A/C SYSTEM No.2 CONDENSER
SUPPORT FROM PREFABRICATED RESIN ROOF SUPPORT

EX EXHAUST FAN. REBALANCE TO 500 CFM

EX ROOF HATCH

~~EX~~ RELIEF AIR FAN

EX ACCU-2

EX ACCU-3

EX REFRIGERANT PIPING DOWN

EX RELIEF AIR VENTS

DUCTLESS SPLIT A/C SYSTEM No.1 CONDENSER
SUPPORT FROM PREFABRICATED RESIN ROOF SUPPORT

LOUVERED ROOF INTAKE VENT
4895 CFM @ 0.07"SP
26x44 THROAT, 620 FPM
40"Wx58"Lx12.25"H
GREENHECK MODEL WIH

FAN-5
SUPPORT FROM ROOF CURB

ACCU-6
SUPPORT FROM ROOF CURB

ACCU-5
SUPPORT FROM ROOF CURB

ROOF PLAN - MECHANICAL NEW WORK
SCALE: 1/8" = 1'-0"

N

RECEIVED
JUN 17 2005
Grimm & Parker Architects

RECEIVED
OCT 25 2004
GIPE ASSOC.

PROJECT RECORD DRAWINGS
SCALE: 1/8" = 1'-0"
8 0 8 16

college of southern maryland

Gipe Associates Inc.
Consulting Engineers
Baltimore, Maryland
Easton, Maryland
GAI WO# 01044

THIS DRAWING AND THE DESIGN AND CONSTRUCTION FEATURES DISCLOSED ARE PROPRIETARY TO GIPE ASSOCIATES, INC. AND SHALL NOT BE ALTERED OR REUSED IN WHOLE OR IN PART WITHOUT THE EXPRESS WRITTEN PERMISSION OF GIPE ASSOCIATES, INC. Copyright © 2001

1355 Beverly Rd.
Suite 105
McLean VA 22101
703.903.9100
703.903.9755 Fax

Grimm + Parker Architects

ROOF PLAN
MECHANICAL NEW WORK
COLLEGE OF SOUTHERN MARYLAND WELLNESS CENTER
LA PLATA, MARYLAND

DATE	DESCRIPTION
12-12-01	DD SUBMITTAL
2-8-02	DGS SUBMISSION
4-11-02	BID SET
4/2003	BID SET
9/21/04	AS-BUILTS

© GRIMM AND PARKER,P.C. 2001

M2.4

DGS# - CC-09-MC99-311

DUCTLESS SPLIT A/C SYSTEM No.3 CONDENSER
SUPPORT FROM PREFABRICATED RESIN ROOF SUPPORT

FAN-6
SUPPORT FROM
ROOF CURB

FAN-8
SUPPORT FROM
ROOF CURB

ACCU-4
SUPPORT FROM ROOF CURB

LOUVERED ROOF RELIEF VENT
750 CFM @ 0.10"SP
12x12 THROAT, 720 FPM
26"Wx26"Lx12.25"H
GREENHECK MODEL WIH

LOUVERED ROOF INTAKE VENT
4355 CFM @ 0.10"SP
22x40 THROAT, 715 FPM
36"Wx54"Lx12.25"H
GREENHECK MODEL WIH

EXISTING BOILER FLUES

EX CURBS W/ NEW CAPS

ACCU-8

LOUVERED ROOF RELIEF VENT
2800 CFM @ 0.10"SP
20x28 THROAT, 720 FPM
34"Wx42"Lx12.25"H
GREENHECK MODEL WIH

NEW
EX RELIEF AIR FAN

AHU-7
SUPPORT FROM ROOF CURB

DEHUMIDIFICATION SYSTEM
CONDENSING UNIT
SUPPORT FROM ROOF CURB

ACCU-8
SUPPORT FROM ROOF CURB

DUCTLESS SPLIT A/C SYSTEM No.2 CONDENSER
SUPPORT FROM PREFABRICATED RESIN ROOF SUPPORT

NEW
EX EXHAUST FAN. REBALANCE TO 1000 CFM

EX ROOF HATCH

NEW
EX RELIEF AIR FAN

EX ACCU-2

EX REFRIGERANT PIPING
DOWN

EX ACCU-3

EX RELIEF AIR VENTS

DUCTLESS SPLIT A/C SYSTEM No.1 CONDENSER
SUPPORT FROM PREFABRICATED RESIN ROOF SUPPORT

LOUVERED ROOF INTAKE VENT
4895 CFM @ 0.07"SP
26x44 THROAT, 620 FPM
40"Wx58"Lx12.25"H
GREENHECK MODEL WIH

FAN-5
SUPPORT FROM
ROOF CURB

ACCU-6
SUPPORT FROM ROOF CURB

ACCU-5
SUPPORT FROM ROOF CURB

ROOF PLAN - MECHANICAL NEW WORK
SCALE: 1/8" = 1'-0"

N

PROJECT RECORD DRAWINGS

RECEIVED
JUN 17 2005
Gipe & Associates Inc.

SCALE: 1/8" = 1'-0"
8 0 8 16

RECEIVED
OCT 25 2004
Gipe & Associates Inc.

college of southern maryland

Gipe Associates Inc.
Consulting Engineers
Baltimore, Maryland
Easton, Maryland
GAI WO# 01044

"THIS DRAWING AND THE DESIGN AND CONSTRUCTION FEATURES DISCLOSED ARE PROPRIETARY TO GIPE ASSOCIATES, INC. AND SHALL NOT BE ALTERED OR REUSED IN WHOLE OR IN PART WITHOUT THE EXPRESS WRITTEN PERMISSION OF GIPE ASSOCIATES, INC. Copyright © 2001"

1355 Beverly Rd.
Suite 105
McLean VA 22101
703.903.9100
703.903.9755 Fax

Grimm and Parker Architects

ROOF PLAN
MECHANICAL NEW WORK
COLLEGE OF SOUTHERN MARYLAND WELLNESS CENTER
LA PLATA, MARYLAND

DATE	DESCRIPTION
12-12-01	DD SUBMITTAL
2-8-02	DGS SUBMISSION
4-11-02	BID SET
4/30/03	Bid Set

© GRIMM AND PARKER,P.C. 2001

M2.4

DGS# - CC-09-MC99-

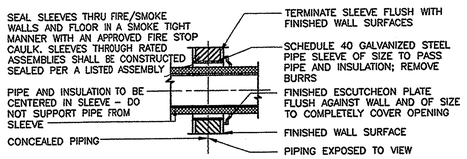

NOTE: FOR INTERIOR FRAME PARTITIONS-PIPE SLEEVES MAY BE FABRICATED FROM GALVANIZED SHEET METAL: ROUND TUBE CLOSED WITH SNAPLOCK JOINT, WELDED SPIRAL SEAMS, OR WELDED LONGITUDINAL JOINT. FABRICATE FROM THE FOLLOWING GAUGES: 3" AND SMALLER, 20 GAUGE; 4" TO 6", 16 GAUGE; OVER 6", 14 GAUGE.

1 TYPICAL PIPE SLEEVE THRU INTERNAL WALL

SCALE: NONE

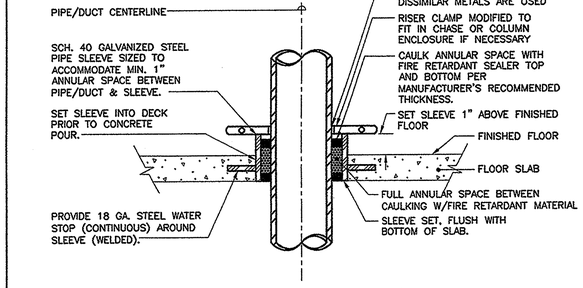

2 TYPICAL SLEEVE THRU FLOOR DETAIL

SCALE: NONE

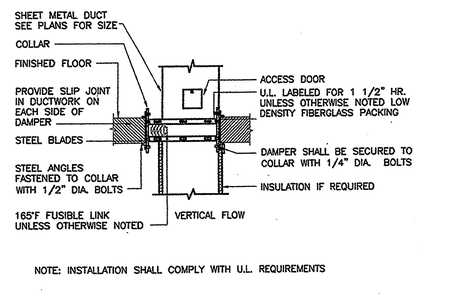

NOTE: INSTALLATION SHALL COMPLY WITH U.L. REQUIREMENTS

3 HORIZONTAL FIRE DAMPER DETAIL

SCALE: NONE

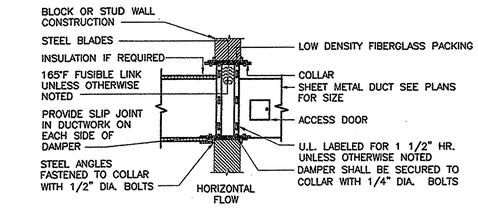

NOTES: 1. INSTALLATION SHALL COMPLY WITH U.L. REQUIREMENTS
2. ALL FIRE DAMPERS SHALL BE THE DYNAMC TYPE

4 VERTICAL FIRE DAMPER DETAIL

SCALE: NONE

RUN-OUT PIPE SCHEDULE	
GPM RANGE	PIPE SIZE
0.0 - 3.9	3/4"
4.0 - 6.9	1"
7.0 - 14.9	1 1/4"
15.0 - 24.9	1 1/2"
25.0 - 50.0	2"

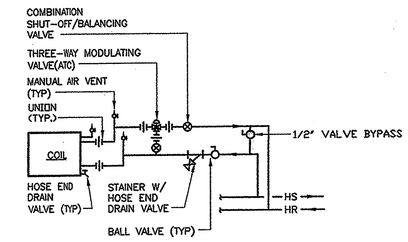

5 HEATING COIL PIPING DETAIL

SCALE: NONE

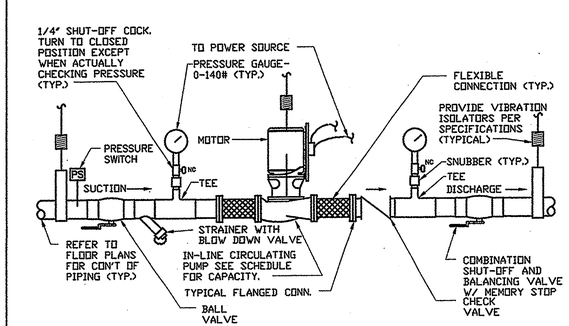

6 IN-LINE PUMP DETAIL

SCALE: NONE

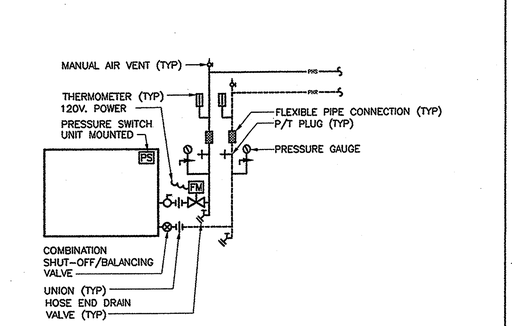

7 DEHUMIDIFICATION EVAPORATOR PIPING DETAIL

SCALE: NONE

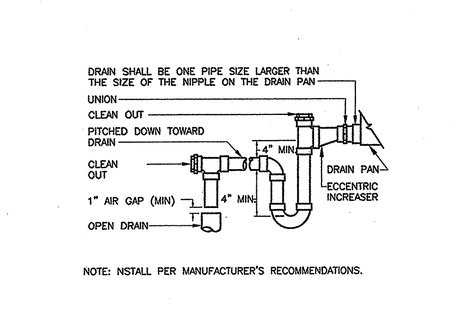

NOTE: NSTALL PER MANUFACTURER'S RECOMMENDATIONS.

8 TYPICAL CONDENSATE DRAIN TRAP DETAIL

SCALE: NONE

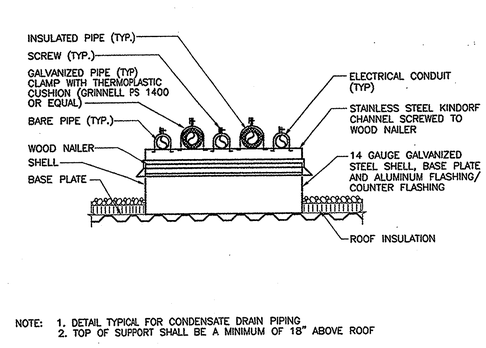

NOTE: 1. DETAIL TYPICAL FOR CONDENSATE DRAIN PIPING
2. TOP OF SUPPORT SHALL BE A MINIMUM OF 18" ABOVE ROOF

9 REFRIGERANT PIPE ROOF SUPPORT DETAIL

SCALE: NONE

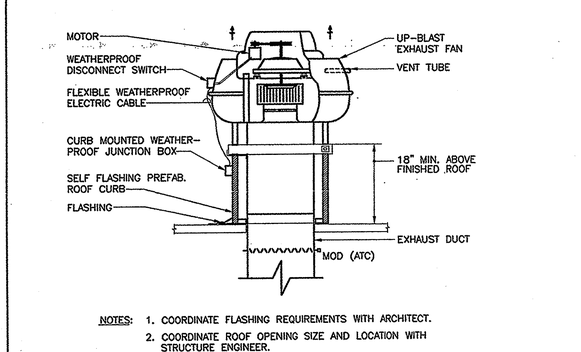

NOTES: 1. COORDINATE FLASHING REQUIREMENTS WITH ARCHITECT.
2. COORDINATE ROOF OPENING SIZE AND LOCATION WITH STRUCTURE ENGINEER.

10 UP BLAST FAN DETAIL

SCALE: NONE

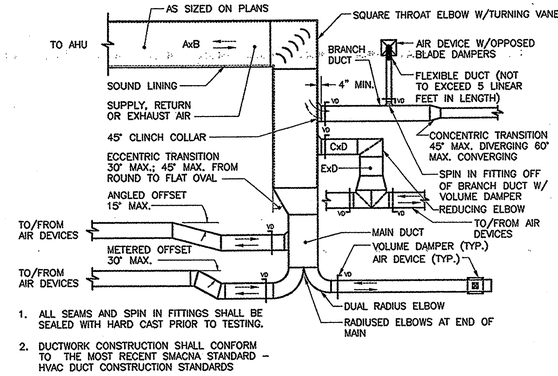

1. ALL SEAMS AND SPIN IN FITTINGS SHALL BE SEALED WITH HARD CAST PRIOR TO TESTING.
2. DUCTWORK CONSTRUCTION SHALL CONFORM TO THE MOST RECENT SMACNA STANDARD - HVAC DUCT CONSTRUCTION STANDARDS

11 TYPICAL SUPPLY OR RETURN DUCT OFFSET AND TRANSITION DETAILS

SCALE: NONE

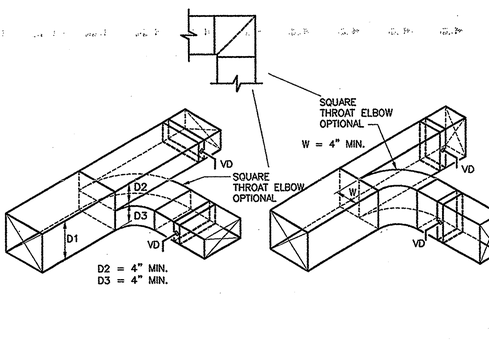

12 PARALLEL FLOW BRANCHES DETAIL

SCALE: NONE

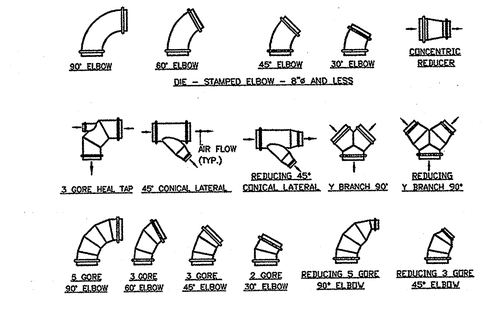

13 TYPICAL ROUND AND FLAT OVAL DUCT FITTINGS DETAIL

SCALE: NONE

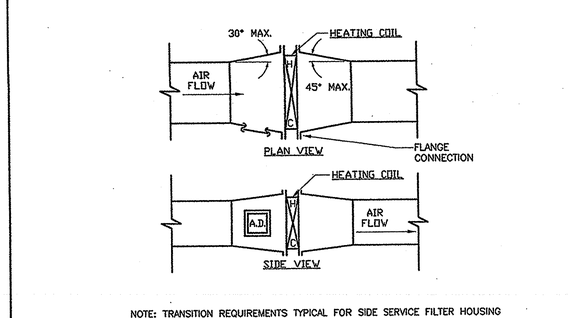

NOTE: TRANSITION REQUIREMENTS TYPICAL FOR SIDE SERVICE FILTER HOUSING

14 TYPICAL DUCT MOUNTED HEATING COIL DETAIL

SCALE: NONE

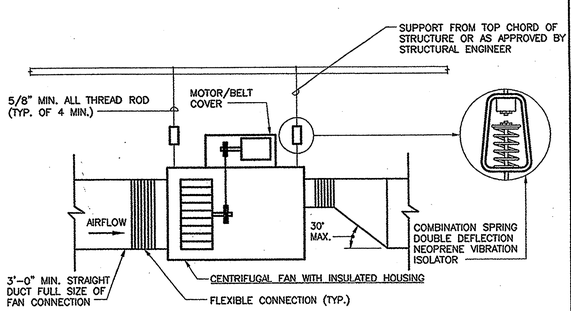

(VIBRATION ISOLATION TYPICAL FOR AIR COOLED SPLIT SYSTEM AIR HANDLING UNITS)

15 TYPICAL IN-LINE CENTRIFUGAL FAN DETAIL

SCALE: NONE

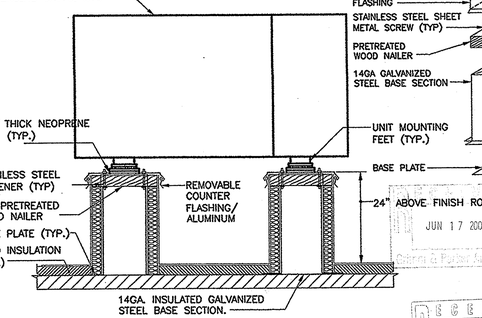

JUN 17 2005

RECEIVED OCT 25 2004 GIPE ASSOC.

PROJECT RECORD DRAWINGS

16 EQUIPMENT ROOF CURB DETAIL

SCALE: NONE

CSM college of southern maryland

Gipe Associates Inc. Consulting Engineers
Baltimore, Maryland
Easton, Maryland
GAI WO# 01044

"THIS DRAWING AND THE DESIGN AND CONSTRUCTION FEATURES DISCLOSED ARE PROPRIETARY TO GIPE ASSOCIATES, INC. AND SHALL NOT BE ALTERED OR REUSED IN WHOLE OR IN PART WITHOUT THE EXPRESS WRITTEN PERMISSION OF GIPE ASSOCIATES, INC. Copyright © 2001

1355 Beverly Rd.
Suite 105
McLean VA 22101
703.903.9100
703.903.9755 Fax

Grimm and Parker Architects

MECHANICAL DETAILS
SHEET 1
COLLEGE OF SOUTHERN MARYLAND WELLNESS CENTER
LA PLATA, MARYLAND

DATE	DESCRIPTION
12-12-01	DD SUBMITTAL
2-8-02	DDS SUBMISSION
4-11-02	BID SET
4/30/03	Bid Set

© GRIMM AND PARKER,P.C. 2003

M7.1

DGS# - CC-09-MC99-3

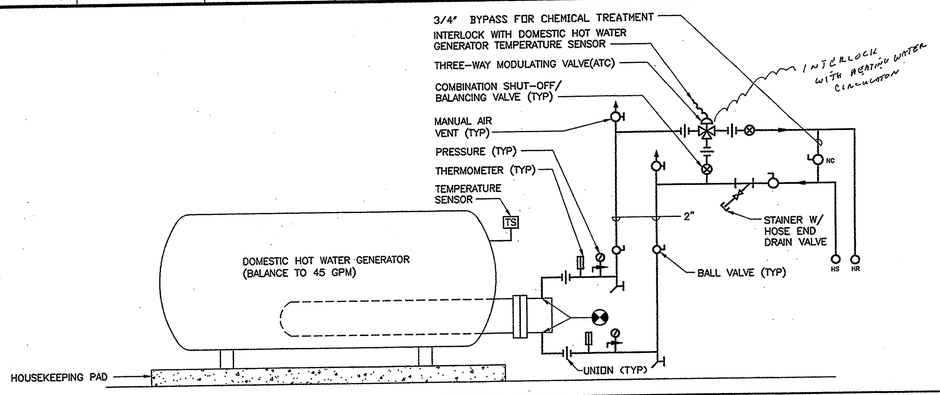

(17) DOMESTIC HOT WATER GENERATOR PIPING DETAIL — SCALE: NONE

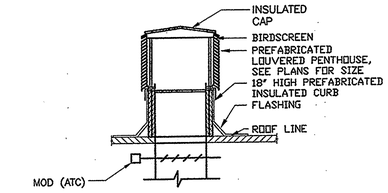

(18) TYPICAL INTAKE/RELIEF PENTHOUSE DETAIL — SCALE: NONE

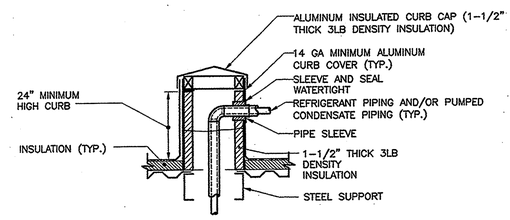

(19) REFRIGERANT PIPE CURB DETAIL — SCALE: NONE

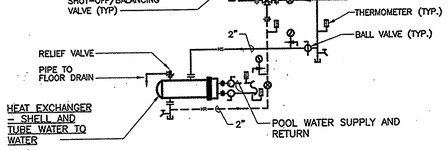

(20) SHELL AND TUBE HEAT EXCHANGER DETAIL — SCALE: NONE

(21) NOT USED — SCALE: NONE

(22) NOT USED — SCALE: NONE

(23) NOT USED — SCALE: NONE

(24) NOT USED — SCALE: NONE

(25) NOT USED — SCALE: NONE

(26) NOT USED — SCALE: NONE

(27) NOT USED — SCALE: NONE

(28) NOT USED — SCALE: NONE

(29) NOT USED — SCALE: NONE

(30) NOT USED — SCALE: NONE

(31) NOT USED — SCALE: NONE

RECEIVED JUN 17 2005

PROJECT RECORD DRAWINGS

RECEIVED OCT 25 2004

College of Southern Maryland
Gipe Associates Inc. Consulting Engineers
Baltimore, Maryland
Easton, Maryland
GAI WO# 01044

"THIS DRAWING AND THE DESIGN CONSTRUCTION FEATURES, DISCLOSED ARE PROPRIETARY TO GIPE ASSOCIATES, INC. AND SHALL NOT ALTERED OR REUSED IN WHOLE OR IN PART WITHOUT THE EXPRESS WRITTEN PERMISSION OF GIPE ASSOCIATES, INC. Copyright © 200

1355 Beverly Rd.
Suite 105
McLean VA 22101
703.903.9100
703.903.9755 Fax

Grimm and Parker Architects

MECHANICAL DETAILS
SHEET 2
COLLEGE OF SOUTHERN MARYLAND WELLNESS CENTER

DATE	DESCRIPTIO
12-12-01	DD SUBMITT
2-8-02	DGS SUBMISS
4-11-02	BID SET
4-30-03	BID SET

© GRIMM AND PARKER, P.C.

M7.2

DGS# - CC-09-MC99

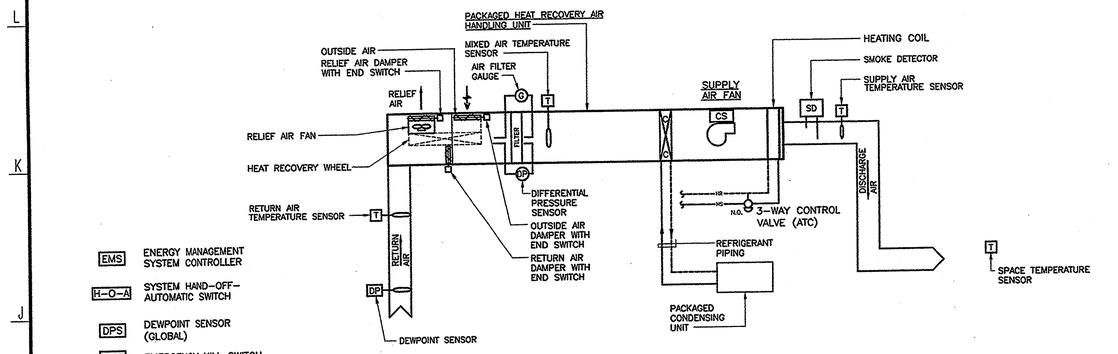

LOCKER ROOM CONSTANT VOLUME, 100% PACKAGED 100 PERCENT OUTDOOR AIR HEAT RECOVERY UNIT CONTROL DIAGRAM ELECTRIC/ELECTRONIC ACTUATION

SCALE: NONE

SEQUENCE OF OPERATION – DDC

1. GENERAL:
   - A. THE AIR HANDLING SYSTEM SHALL BE STARTED AND STOPPED THROUGH A SYSTEM ON-OFF-AUTOMATIC (H-O-A) SWITCH. WHEN INDEXED TO "ON" THE SYSTEM SHALL BE ENERGIZED AND OPERATE UNDER ITS CONTROL SEQUENCE. WHEN INDEXED TO "OFF" THE SYSTEM SHALL DE-ENERGIZE. WHEN INDEXED TO THE "AUTOMATIC" POSITION THE SYSTEM SHALL BE STARTED AND STOPPED THROUGH THE ENERGY MANAGEMENT SYSTEM (EMS). THE H-O-A SYSTEM SWITCH POSITION SHALL BE MONITORED THROUGH THE EMS.
   - B. SUPPLY FAN SHALL BE STARTED AND STOPPED BY THE EMS SYSTEM BY WAY OF REMOTE OPTIMUM START/STOP PROGRAM (WITH MANUAL OVERRIDE). RELIEF AIR FAN AND EXHAUST AIR FAN SHALL BE INTERLOCKED TO OPERATE WITH THE SUPPLY AIR FAN.
   - C. WHEN THE UNIT FAN IS OFF THE OUTSIDE AIR DAMPER AND RELIEF AIR DAMPER SHALL CLOSE, AND RETURN AIR DAMPER OPEN; THE DIRECT EXPANSION SYSTEM SHALL BE DE-ENERGIZED AND THE RELIEF AIR FAN AND EXHAUST FAN SHALL BE DE-ENERGIZED.
   - D. SUPPLY FAN, AND RELIEF AIR FAN, SHALL BE DE-ENERGIZED WHENEVER THE SUPPLY SMOKE DETECTOR SENSES PRODUCTS OF COMBUSTION.
   - E. ALL SAFETIES AND ASSOCIATED CONTROLS SHALL REMAIN ACTIVE WHETHER IS LOCALLY OR REMOTELY CONTROLLED AND/OR MANUALLY OVERRIDDEN i.e. HARD WIRED).
   - F. THE HEAT RECOVERY WHEEL SHALL ONLY BE ACTIVE WHEN THE AIR HANDLING UNIT IS IN THE OCCUPIED MODE OF OPERATION TO PRECONDITION THE OUTSIDE AIR STREAM. HEAT RECOVERY WHEEL CONTROL SHALL BE AS RECOMMENDED BY THE UNIT MANUFACTURER.
   - G. PROVIDE A REMOTE EMERGENCY SHUT-DOWN SWITCH FOR SYSTEM SHUT-DOWN. REMOTE SWITCH SHALL BE INSTALLED AT A LOCATION APPROVED BY THE FIRE INSPECTOR.
2. OCCUPIED CYCLE:
   - A. GENERAL:
     WHEN THE UNIT FAN IS ENERGIZED TO RUN, AND THE SYSTEM IS IN THE OCCUPIED CYCLE (I.E. NOT IN WARM-UP/PULL DN MODE). THE RELIEF AIR FAN SHALL BE ENERGIZED AND THE HEAT RECOVERY WHEEL SHALL BE ENERGIZED. GAS HEATER VALVE SHALL MODULATE TO MAINTAIN ITS ASSOCIATED SPACE TEMPERATURE. THE COOLING COIL/CONDENSING UNIT OR HEATING COIL SHALL BE SEQUENCED TO:
     1. MAINTAIN RETURN AIR TEMPERATURE SETPOINT
        OR
     2. MAINTAIN SPACE AIR TEMPERATURE SETPOINT.

     COOLING CONTROL OPTION SHALL BE DETERMINED BY THE EMS.
   - B. WARM-UP/PULL DOWN
     THE UNIT CONTROL SHALL BE ARRANGED FOR A WINTER TIME MORNING WARM-UP CYCLE AND SUMMER PULL DOWN COOLING CYCLE. DURING WARM-UP (PULL-DOWN) CYCLE OUTSIDE AIR DAMPER AND RELIEF AIR DAMPER SHALL REMAIN CLOSED, RELIEF AIR FAN SHALL BE DE-ENERGIZED, THE RETURN AIR DAMPER OPEN AND THE HEATING COIL OPEN UNTIL THE RETURN AIR TEMPERATURE RISES TO 70°F. SIMILARLY FOR PULL DOWN, THE CONDENSING UNIT SHALL BE ENERGIZED UNTIL THE RETURN TEMPERATURE FALLS TO 75°F. AT THAT POINT, THE OUTSIDE AIR DAMPER SHALL OPEN TO AN ADJUSTABLE MINIMUM POSITION AND THE HEATING COIL CONTROL VALVE (OR CONDENSING UNIT) SHALL BE PLACED UNDER THE CONTROL OF THE ROOM SENSOR.
   - C. DEHUMIDIFICATION CONTROL:
     WHENEVER SPACE HUMIDITY, AS SENSED BY RETURN AIR HUMIDISTAT, EXCEEDS IT SETPOINT 60% RH (ADJUSTABLE), THE HUMIDITY CONTROLLER SHALL OVERRIDE THE COOLING COIL CONTROLLER TO MAINTAIN ITS SETPOINT 52°F (ADJUSTABLE THROUGH SOFTWARE). SPACE TEMPERATURE SENSOR SHALL MODULATE HEATING WATER CONTROL VALVE TO MAINTAIN SPACE TEMPERATURE SETPOINT. DEHUMIDIFICATION CONTROL SHALL BE ENABLED-DISABLED THROUGH THE EMS.
   - D. COOLING CONTROL:
     SPACE TEMPERATURE SENSOR SHALL BE INTERLOCKED WITH THE CONDENSING UNIT TO PROVIDE THE REQUIRED COOLING OR DEHUMIDIFICATION. CONTROL STEPS SHALL ALSO BE LOCKED OUT AT OUTDOOR AIR SETPOINT TEMPERATURES THROUGH THE DIRECT DIGITAL CONTROL SYSTEM. THESE SETPOINTS SHALL BE COORDINATED WITH THE EQUIPMENT MANUFACTURER AND ENGINEER TO AVOID COIL FROSTING.
   - E. HEATING:
     THE HEATING COIL CONTROL VALVE SHALL BE MODULATED (I.E. VALVE CYCLE CONTROL, OPEN-CLOSE) TO MAINTAIN SPACE TEMPERATURE SETPOINT OF 72°F (ADJUSTABLE).
3. UNOCCUPIED CYCLE:
   - A. SUPPLY FAN SHALL BE DE-ENERGIZED, OUTSIDE AIR DAMPERS AND RELIEF AIR DAMPER SHALL BE CLOSED, RELIEF AIR FAN SHALL BE DE-ENERGIZED AND RETURN AIR DAMPER SHALL BE OPEN. THE CONDENSING UNIT SHALL BE LOCKED OUT, AND THE HEAT RECOVERY WHEEL SHALL BE DEENERGIZED.
   - B. THE SPACE TEMPERATURE SENSOR SHALL RESET TO A REDUCED NIGHT SETBACK TEMPERATURE OF 50°F (ADJUSTABLE). NIGHT SETBACK TEMPERATURE SHALL BE MAINTAINED IN THE SPACE BY CYCLING THE AIR HANDLING UNIT FAN AS A RECIRCULATING UNIT HEATER.

INPUT/OUTPUT SUMMARY FOR DIRECT EXPANSION PACKAGED TYPE CONSTANT VOLUME AIR HANDLING UNIT

BUILDING SYSTEM: AHU-7: LOCKER ROOMS

DESCRIPTION	INPUTS: ANALOG: ROOM TEMPERATURE	DUCT TEMPERATURE	WATER TEMPERATURE	O.A. TEMPERATURE	HUMIDITY	STATIC PRESSURE	CURRENT SENSOR	FLOW	POSITION INDICATION	FLOW SWITCH	SMOKE CLOSURE	STATUS	LOW TEMPERATURE CUTOUT	SWITCH POSITION INDICATOR	INPUTS: BINARY: MODULATING ACTUATOR	E/P TRANSDUCER	VARIABLE SPEED	OUTPUTS: ANALOG: CONTROL RELAY	SOLENOID	START/STOP	2-POSITION DAMPER MOD.	OUTPUTS: BINARY: ACTUATOR	MERCURY RELAY	FEED/BLEED S/W	OUTPUTS: 3-POINT FLOATING	ALARMS: HIGH LIMIT	LOW LIMIT	RUN TIME	MAINTENANCE MESSAGE	SMOKE/FIRE	FEATURES: SCHEDULED START/STOP	TEMPERATURE SETBACK/SETUP	OPTIMIZED START (ADAPT.)	DEMAND LIMITING	DUTY CYCLE	VENTILATION DELAY	ECONOMIZER CYCLE (D.B.)	ECONOMIZER CYCLE W/ O.A. TEMP.	H.W. RESET W/ O.A. TEMP.	VAV CONTROL	REMOTE READ/RESET	LEAD/LAG CONTROL	COLOR GRAPHICS	POWER FAIL RESTART	TREND LOGS	WARM UP/PULL DOWN
AHU																																									
COOLING COIL																																										
O.A. DAMPER																																										
FILTER																																										
RETURN AIR DAMPER																																										
MIXED AIR																																										
OUTDOOR AIR (GLOBAL)																																										
RETURN AIR TEMPERATURE																																										
SPACE TEMPERATURE																																										
SUPPLY AIR																																										
SUPPLY FAN																																										
WARM-UP/PULL DN																																										
SMOKE (SUPPLY)																																										
H-O-A SWITCH																																										
RELIEF AIR FAN																																										
CONDENSING UNIT																																										
RELIEF AIR DAMPER																																										
HEAT RECOVERY WHEEL																																										
DEHUMIDIFICATION CONTROL																																										
FIRE (EXTERNAL)																																										

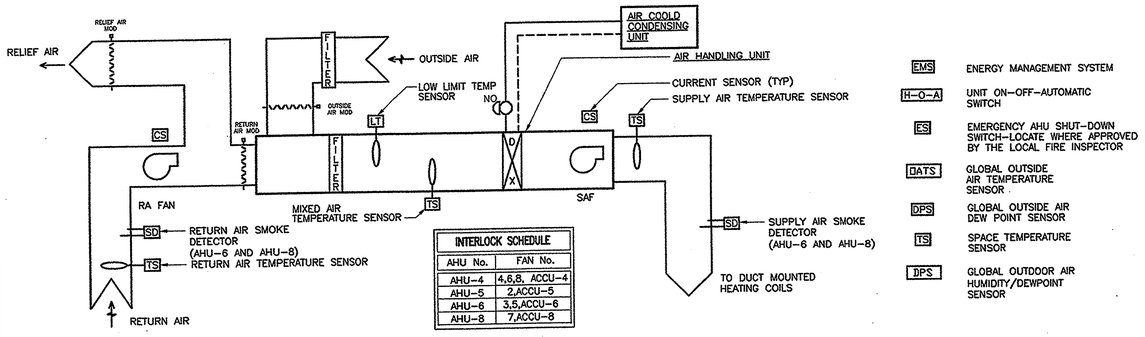

INTERLOCK SCHEDULE	
AHU No.	FAN No.
AHU-4	4,6,8, ACCU-4
AHU-5	2,ACCU-5
AHU-6	3,5,ACCU-6
AHU-8	7,ACCU-8

TYPICAL SPLIT TYPE DIRECT EXPANSION CONSTANT VOLUME AIR HANDLING UNIT CONTROL DIAGRAM

SCALE: NONE

SEQUENCE OF OPERATION – DDC (ELECTRIC/ELECTRONIC ACTUATION)

1. GENERAL:
   - A. SUPPLY AIR FAN SHALL BE STARTED AND STOPPED THROUGH THE EMS SYSTEM BY WAY OF OPTIMUM START/STOP PROGRAM (WITH MANUAL OVERRIDE) WHEN THE SYSTEM SWITCH IS IN THE AUTOMATIC POSITION. RETURN AIR FAN SHALL BE INTERLOCKED TO OPERATE WITH SUPPLY AIR FAN. THE SYSTEM SHALL BE DE-ENERGIZED WHEN THE SYSTEM SWITCH IS INDEXED TO THE OFF POSITION AND ENERGIZED WHEN INDEXED TO THE ON POSITION.
   - B. WHEN THE SUPPLY AIR FAN IS DE-ENERGIZED THE OUTSIDE AIR DAMPER AND RELIEF DAMPER SHALL CLOSE, AND THE RETURN AIR DAMPER SHALL OPEN. RETURN AIR FAN SHALL BE-ENERGIZE WITH SUPPLY AIR FAN.
   - C. SMOKE DETECTORS SHALL BE MOUNTED IN THE INLET AND DISCHARGE OF THE UNIT. UPON DETECTION OF PRODUCTS OF COMBUSTION, THE AIR HANDLING SYSTEM SHALL SHUT DOWN AND A SIGNAL SHALL BE SENT TO THE FIRE ALARM SYSTEM. THE ELECTRICAL CONTRACTOR SHALL RUN SIGNAL WIRING FROM THE SMOKE DETECTORS TO THE FIRE ALARM SYSTEM. THE WIRING FROM THE SMOKE DETECTORS TO THE SUPPLY FAN SHALL BE BY THE ATC CONTRACTOR. INSTALL SMOKE DETECTORS PER THE MANUFACTURERS RECOMMENDATIONS.
   - D. PROVIDE CURRENT SENSORS ON SUPPLY, RETURN AND EXHAUST FANS TO DETERMINE THE STATUS OF ALL EQUIPMENT.
   - E. ALL DAMPERS SHALL FAIL TO NORMAL SAFE POSITIONS.
   - F. COORDINATE ALL REFRIGERATION CONTROLS WITH THE AIR COOLED CONDENSING UNITS PER THE MANUFACTURERS RECOMMENDATION.
   - G. PROVIDE POSITIONERS AND SPRING RETURNS FOR ALL MODULATING DAMPERS.
   - H. ALL SAFETIES SHALL BE HARD WIRED TO REMAIN FUNCTIONAL WHEN THE SYSTEM IN MANUALLY INDEXED TO THE ON POSITION.
   - I. ALL SETPOINTS AND TIME SCHEDULES SHALL BE ADJUSTABLE THROUGH SOFTWARE.
   - J. PROVIDE A REMOTE EMERGENCY SHUT-DOWN SWITCH (KEYED TYPE) TO DE-ENERGIZE UNIT. LOCATE EMERGENCY SHUT-DOWN SWITCH WHERE APPROVED BY THE LOCAL FIRE INSPECTOR.
   - K. WHENEVER THE AIR HANDLING SYSTEM HAS BE DEENERGIZED THE AIR COOLED CONDENSING UNITS SHALL BE DEENERGIZED AND LOCKED OUT.
   - L. HEATING COIL CONTROL VALVE SHALL BE IN THE NORMALLY OPEN POSITION.
   - C. THE ROOM TEMPERATURE SENSOR SHALL HAVE MANUAL SLIDE TEMPERATURE RANGE WHICH IS INDIVIDUALLY PROGRAMMABLE THROUGH THE DDC SYSTEM. EACH TEMPERATURE SENSOR SHALL HAVE A 3°F DEADBAND BETWEEN HEATING AND COOLING (ADJUSTABLE THROUGH SOFTWARE). EACH TEMPERATURE SENSOR SHALL SHALL HAVE A MANUALLY ADJUSTABLE 2 HOUR OVERRIDE BUTTON WHICH CAN BE INDIVIDUALLY ENABLED OR DISABLED THROUGH THE ENERGY MANAGEMENT SYSTEM WHEN THE FAN-COIL UNIT SWITCH IS IN THE AUTOMATIC MODE ONLY. THE OVERRIDE TIMER SHALL ALLOW THE UNIT TO OPERATE IN THE OCCUPIED MODE FOR UP TO 2 HOURS.
   - D. ECONOMIZER CONTROL:
     ECONOMIZER FEATURE SHALL BE CONTROLLED BY "OFF – AUTOMATIC DRY BULB – AUTOMATIC ENTHALPY" INDEX SWITCH. THE ROOM TEMPERATURE SENSOR, THROUGH DRY BULB ECONOMIZER CONTROLLER SHALL MODULATE THE ECONOMIZER OUTSIDE AIR/RETURN AIR DAMPERS, IN SEQUENCE WITH THE COOLING SYSTEM TO MAINTAIN RETURN AIR TEMPERATURE OR COOLING CAPACITY. LOW LIMIT TEMPERATURE SENSOR SHALL OVERRIDE THE COOLING SIGNAL TO PREVENT THE MIXED AIR TEMPERATURE FROM FALLING BELOW ITS SETTING (45°F, ADJUSTABLE). DRY BULB CONTROLLER SHALL ENERGIZE THE ECONOMIZER CYCLE WHENEVER THE OUTSIDE AIR AS MEASURED BY THE LOCAL OUTSIDE AIR SENSOR IS LESS THAN 75°F. THE EMS THROUGH DRY BULB ECONOMIZER CONTROLLER SHALL MODULATE OUTSIDE AIR/RETURN AIR DAMPERS IN SEQUENCE WITH THE CONDENSING UNIT, TO MAINTAIN THE COOLING SETPINT. ECONOMIZER CONTROL SHALL NOT OPERATE ABOVE 75°F (ADJUSTABLE) OUTSIDE AIR TEMPERATURE. THE CONDENSING UNIT SHALL BE LOCKED OUT BELOW 55°F (ADJ) OUTSIDE AIR TEMPERATURE AND SHALL BE DEMAND LIMITED UP TO 75°F (ADJ) OUTSIDE AIR TEMPERATURE (i.e. ONE COMPRESSOR STEP LOCKED OUT). THE OUTSIDE ECONOMIZER CYCLE SHALL ALSO BE CAPABLE OF BEING ENERGIZED BASED ON OUTSIDE AIR ENTHALPY (ADJUSTABLE THROUGH SOFTWARE) AS CALCULATED BY GLOBAL OUTSIDE AIR TEMPERATURE SENSOR AND DEWPOINT SENSOR AND OPERATE IN SIMILAR FASHION AS THE DRY BULB ECONOMIZER CONTROL. COORDINATE REQUIREMENT WITH THE EQUIPMENT MANUFACTURER.
   - E. OCCUPIED/VENTILATION DELAY:
     PROVIDE A MANUALLY (THROUGH THE EMS) INDEXED MODE OF OPERATION TO MAINTAIN OCCUPIED SPACE TEMPERATURE WHILE RECIRCULATING ALL AIR DURING UNOCCUPIED PERIODS. COMPRESSOR STEPS SHALL ALSO BE MANUALLY STAGED THROUGH THE EMS TO MAINTAIN DISCHARGE AIR TEMPERATURE (50°F-ADJUSTABLE).
2. OCCUPIED CYCLE:
   - A. GENERAL:
     WHEN THE UNIT FAN IS ENERGIZED TO RUN, THE RETURN AIR FAN SHALL BE INTERLOCKED TO RUN WITH THE SUPPLY AIR FAN.
   - B. WARM-UP/PULL DOWN
     THE UNIT CONTROL SHALL BE ARRANGED FOR A WINTER TIME MORNING WARM-UP CYCLE AND SUMMER PULL DOWN COOLING CYCLE. DURING WARM-UP (PULL-DOWN) CYCLE OUTSIDE AIR DAMPER AND RELIEF AIR DAMPER SHALL REMAIN CLOSED, THE RETURN AIR DAMPER OPEN AND THE AIR HANDLING UNIT SHALL BE ENERGIZED (SUPPLY AND RETURN FANS) UNTIL THE RETURN AIR TEMPERATURE RISES TO 70°F. SIMILARLY FOR PULL DOWN, THE CONDENSING UNIT SHALL BE ENERGIZED (DEMAND LIMITED THROUGH EMS) UNTIL THE RETURN TEMPERATURE FALLS TO 75°F. AT THAT POINT, THE OUTSIDE AIR DAMPER SHALL OPEN TO AN ADJUSTABLE MINIMUM POSITION AND THE 3-WAY HEATING CONTROL VALVE AND/(OR CONDENSING UNIT) SHALL BE PLACED UNDER THE CONTROL OF THE ROOM SENSOR. OUTSIDE AIR DAMPER SHALL REMAIN AT MINIMUM POSITION UNTIL ECONOMIZER MODE IS ENERGIZED.
3. UNOCCUPIED CYCLE:
   - A. SUPPLY FAN SHALL BE DE-ENERGIZED, OUTSIDE AIR DAMPER AND RELIEF AIR DAMPER SHALL BE CLOSED, RETURN AIR FAN SHALL BE DE-ENERGIZED AND RETURN AIR DAMPER SHALL BE OPEN. THE CONDENSING UNIT SHALL BE DE-ENERGIZED.
   - B. ALL ROOM TEMPERATURE SENSORS SHALL BE RESET TO 55°F (ADJUSTABLE THROUGH SOFTWARE). SPACE TEMPERATURE SENSORS SHALL CYCLE FAN AS A RECIRCULATING UNIT TO MAINTAIN THE REDUCED NIGHT SETPOINT TEMPERATURE.
   - C. WHEN THE UNITS ARE IN THE UNOCCUPIED MODE OF OPERATION AND THE OUTSIDE AIR TEMPERATURE FALLS BELOW 20°F (ADJUSTABLE THROUGH SOFTWARE), THE TEMPERATURE SENSORS SHALL BE RESET TO 70°F (ADJUSTABLE THROUGH SOFTWARE). THE UNITS SHALL CYCLE AS PREVIOUSLY DESCRIBED TO MAINTAIN SPACE TEMPERATURE SETPOINT.

INPUT/OUTPUT SUMMARY FOR DIRECT EXPANSION CONSTANT VOLUME ROOFTOP AIR HANDLING UNIT

BUILDING SYSTEM: CONSTANT VOLUME AIR HANDLING SYSTEM

NEW ADDITION OFFICE AREA AHU-5
NEW ADDITION FITNESS AHU-6
NEW ADDITION LOBBY AHU-4
EXISTING BUILDING OFFICE AHU-8 AREA OKSD ALT #4

DESCRIPTION	INPUTS: ANALOG: ROOM TEMPERATURE	DUCT TEMPERATURE	WATER TEMPERATURE	O.A. TEMPERATURE	HUMIDITY (CALCULATED)	STATIC PRESSURE	CURRENT SENSOR	POSITION INDICATION	FLOW SWITCH	STATUS	SWITCH CLOSURE	LOW TEMPERATURE CUTOUT	SWITCH POSITION INDICATOR	INPUTS: BINARY: MODULATING ACTUATOR	E/P TRANSDUCER	VARIABLE SPEED	OUTPUTS: ANALOG: CONTROL RELAY	SOLENOID	START/STOP	2-POSITION DAMPER MOD.	OUTPUTS: BINARY: ACTUATOR	MERCURY RELAY	FEED/BLEED S/W	OUTPUTS: 3-POINT FLOATING	ALARMS: HIGH LIMIT	LOW LIMIT	RUN TIME	MAINTENANCE MESSAGE	SMOKE/FIRE	FEATURES: SCHEDULED START/STOP	TEMPERATURE SETBACK/SETUP	OPTIMIZED START (ADAPT.)	DEMAND LIMITING	DUTY CYCLE	VENTILATION DELAY	ECONOMIZER CYCLE	H.W. RESET W/ O.A. TEMP.	VAV CONTROL	REMOTE READ/RESET	LEAD/LAG CONTROL	COLOR GRAPHICS	POWER FAIL RESTART	TREND LOGS	WARM UP/PULL DOWN
AHU																																									
MIXED AIR																																										
OUTDOOR AIR (GLOBAL)																																										
RETURN AIR																																										
SPACE TEMPERATURE (TYP EA)																																										
SUPPLY AIR																																										
SUPPLY FAN																																										
RETURN FAN																																										
WARM-UP/PULL DN																																										
SMOKE (S/A AND R/A)																																										
ECONOMIZER																																										
FIRE (EXTERNAL)																																										
CONDENSING UNITS																																										

JUN 17 2005

PROJECT RECORD DRAWINGS

RECEIVED
OCT 25 2004
GIPE ASSOC.

Gipe Associates Consulting Engineers
Baltimore, Maryland
Easton, Maryland
GAI WO# 010-4

"THIS DRAWING AND THE DESIGN CONSTRUCTION FEATURES EXPRESSED ARE PROPRIETARY TO GIPE ASSOCIATES, INC. AND SHALL NOT BE ALTERED OR REUSED IN WHOLE OR IN PART WITHOUT THE EXPRESS WRITTEN PERMISSION OF GIPE ASSOCIATES, INC. Copyright ©

1355 Beverly Rd.
Suite 105
McLean VA 22101
703.903.9100

AUTOMATIC TEMPERATURE CONTROLS
SHEET 1
COLLEGE OF SOUTHERN MARYLAND WELLNESS CENTER

DATE	DESCRIPTION
12-12-01	DD SUBM
2-8-02	DGS SUBM
4-11-02	BID SET
4/24/03	Bid Set

© GRIMM AND PARKER, 2003

M81

DGS# - CC-09-M

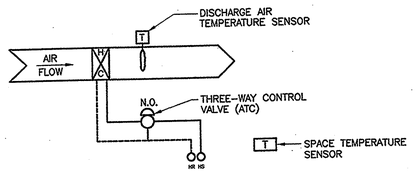

DUCT MOUNTED HEATING COIL

SCALE: NONE

SEQUENCE OF OPERATION - DDC (ELECTRIC/ELECTRONIC ACUTUATION)

A. THE TEMPERATURE SENSOR AND ASSOCIATED HOT WATER HEATING COIL SHALL BE INTERLOCKED WITH ITS ASSOCIATED AIR HANDLING UNIT. INTERFACE REQUIREMENTS INCLUDE LOAD ANALYZING, WARM-UP/PULL DOWN, NIGHT SETBACK etc.

B. WHEN THE AIR HANDLING SYSTEM IS INDEXED TO THE WARM-UP CYCLE, THE HEAT COIL CONTROL VALVE SHALL BE FULLY OPEN UNTIL THE SPACE TEMPERATURE SET POINT IS REACHED.

C. WHEN THE SPACE TEMPERATURE HAS BEEN REACHED AFTER MORNING WARM-UP, THE CONTROL VALVE SHALL MODULATE TO MAINTAIN SPACE TEMPERATURE (70°F-ADJUSTABLE THROUGH SOFTWARE) DURING THE OCCUPIED MODE OF OPERATION.

D. WHEN THE AIR HANDLING SYSTEM IS INDEXED TO THE UNOCCUPIED MODE THE CONTROL VALVE SHALL BE FULLY OPEN AND ALL TEMPERATURE SENSORS SHALL BE RESET TO 55°F (ADJUSTABLE THROUGH SOFTWARE). WHENEVER ANY TEMPERATURE SENSOR REACHES THIS SET POINT, THE AIR HANDLING UNIT SHALL CYCLE LIKE A RECIRCULATING UNIT HEATER.

E. WHEN IN THE UNOCCUPIED MODE OF OPERATION AND THE OUTSIDE AIR TEMPERATURE FALLS TO 20°F (ADJUSTABLE THROUGH SOFTWARE) OR LESS ALL TEMPERATURE SENSORS SHALL RESET TO THEIR OCCUPIED SET POINT AND THE AIR HANDLING UNIT SHALL CYCLE LIKE A RECIRCULATING UNIT HEATER.

F. EACH TEMPERATURE SENSOR SHALL HAVE INDIVIDUAL PROGRAMMED TEMPERATURE RANGE ADJUSTABLE THROUGH THE EMS.

G. EACH TEMPERATURE SENSOR SHALL BE PROVIDED WITH A LOCAL 2-HOUR OVERRIDE TIMER TO MAINTAIN THE OCCUPIED TEMPERATURE SETTINGS. WHEN ANY TEMPERATURE SENSOR IS IN THE OVERRIDE POSITION, THE ASSOCIATED AIR HANDLING SYSTEM SHALL BE ENERGIZED. THIS FEATURE SHALL BE ENABLED/DISABLED THROUGH THE EMS.

H. THE EMS SHALL BE ABLE TO MONITOR AND RESET EACH SPACE TEMPERATURE SENSOR, MONITOR HEAT COIL DISCHARGE AIR TEMPERATURE, AND BE ABLE TO OVERRIDE THE SPACE AIR TEMPERATURE SENSOR TO CONTROL HEAT COIL VALVE BASED ON DISCHARGE AIR TEMPERATURE.

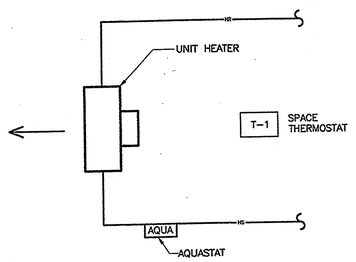

TYPICAL UNIT HEATER CONTROL

SCALE: NONE

SEQUENCE OF OPERATION

1. SPACE THERMOSTAT SHALL CYCLE UNIT FAN WHEN HOT WATER FLOW IS SENSED BY STRAP ON AQUASTAT TO MAINTAIN SPACE TEMPERATURE SETPOINT OF 65°F (ADJUSTABLE).

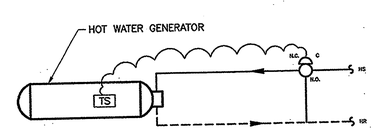

DOMESTIC HOT WATER GENERATOR CONTROL DIAGRAM

SCALE: NONE

SEQUENCE OF OPERATION

1. DOMESTIC HOT WATER GENERATOR TEMPERATURE SENSOR SHALL MODULATE HEATING WATER 3-WAY CONTROL VALVE TO MAINTAIN ITS SETPOINT TEMPERATURE OF 140°F (ADJ)

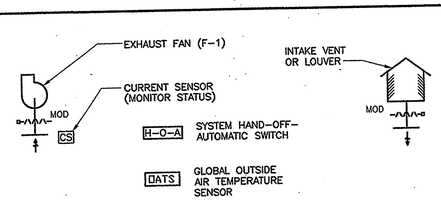

POOL FILTER ROOM EXHAUST SYSTEM SEQUENCE OF OPERATION

1. GENERAL:

A. THE EXHAUST SYSTEM SHALL BE STARTED AND STOPPED THROUGH A SYSTEM ON-OFF-AUTOMATIC (H-O-A) SWITCH. WHEN INDEXED TO "ON" THE SYSTEM SHALL BE ENERGIZED AND OPERATE UNDER ITS CONTROL SEQUENCE. WHEN INDEXED TO "OFF" THE SYSTEMSHALL DEENERGIZE. WHEN INDEXED TO THE "AUTOMATIC" POSITION THE SYSTEM SHALL BE STARTED AND STOPPED THROUGH THE ENERGY MANAGEMENT SYSTEM (EMS). THE H-O-A SYSTEM SWITCH POSITION SHALL BE MONITORED THROUGH THE EMS.

B. POOL FILTER ROOM EXHAUST FAN SHALL OPERATE CONTINUOUSLY. WHEN OUTSIDE AIR TEMPERATURE IS 50°F OR LESS, THE FAN SHALL OPERATE AT MINIMUM SPEED. WHEN OUTSIDE TEMPERATURE IS GREATER THAN 50°F, THE FAN SHALL OPERTAE AT MAXIMUM SPEED.

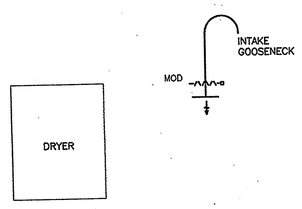

DRYER INTAKE CONTROL SEQUENCE OF OPERATION

1. GENERAL:

A. WHEN DRYER IS INDEXED TO ON THE OUTDOOR AIR MOD SHALL OPEN. DAMPER POSITION SHALL BE MONITORED BY THE EMS.

B. WHEN DRYER IS INDEXED TO OFF THE OUTDOOR AIR MOD SHALL CLOSE. DAMPER POSITION SHALL BE MONITORED BY THE EMS.

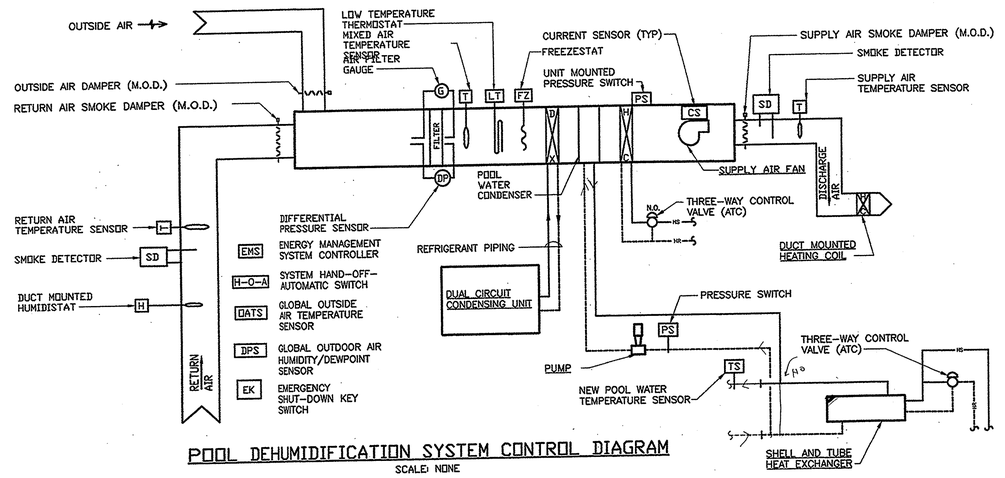

POOL DEHUMIDIFICATION SYSTEM CONTROL DIAGRAM

SCALE: NONE

SEQUENCE OF OPERATION - DDC (ELECTRIC/ELECTRONIC ACTUATION)

1. GENERAL:

A. THE DEHUMIDIFICATION SYSTEM SHALL BE STARTED AND STOPPED THROUGH A SYSTEM ON-OFF-AUTOMATIC (H-O-A) SWITCH. WHEN INDEXED TO "ON" THE SYSTEM SHALL BE ENERGIZED AND OPERATE UNDER ITS CONTROL SEQUENCE. WHEN INDEXED TO "OFF" THE SYSTEMSHALL DEENERGIZE. WHEN INDEXED TO THE "AUTOMATIC" POSITION THE SYSTEM SHALL BE STARTED AND STOPPED THROUGH THE ENERGY MANAGEMENT SYSTEM (EMS). THE H-O-A SYSTEM SWITCH POSITION SHALL BE MONITORED THROUGH THE EMS.

B. SUPPLY FAN SHALL BE STARTED AND STOPPED BY THE EMS SYSTEM BY WAY OF REMOTE OPTIMUM START/STOP PROGRAM (WITH MANUAL OVERRIDE). EXHAUST AIR FAN SHALL BE INTERLOCKED TO OPERATE WITH THE SUPPLY AIR FAN.

C. WHEN THE UNIT FAN IS OFF THE OUTSIDE AIR DAMPER AND EXHAUST AIR DAMPER SHALL CLOSE, AND RETURN AIR DAMPER OPEN; THE CONDENSING UNIT SHALL BE DE-ENERGIZED AND THE EXHAUST AIR FAN SHALL BE DE-ENERGIZED.

D. SUPPLY FAN AND RETURN AIR FAN SHALL BE DE-ENERGIZED WHENEVER THE AIR TEMPERATURE DROPS BELOW THE LIMIT OF FREEZESTAT, OR WHENEVER THE SUPPLY OR RETURN SMOKE DETECTORS SENSE PRODUCTS OF COMBUSTION.

E. ALL SAFETIES AND ASSOCIATED CONTROLS SHALL REMAIN ACTIVE WHETHER LOCALLY OR REMOTELY CONTROLLED AND/OR MANUALLY OVERRIDDEN.

F. COORDINATE CONDENSING UNIT CONTROLS WITH THE CONDENSING UNIT MANUFACTURER.

I. ALL SETPOINTS AND TIME SCHEDULES SHALL BE ADJUSTABLE THROUGH SOFTWARE.

J. PROVIDE A REMOTE EMERGENCY SHUT-DOWN SWITCH (KEYED TYPE) TO DE-ENERGIZE UNIT. LOCATE EMERGENCY SHUT-DOWN SWITCH WHERE APPROVED BY THE LOCAL FIRE INSPECTOR.

2. OCCUPIED CYCLE:

GENERAL:
WHEN THE UNIT FAN IS ENERGIZED TO RUN, THE EXHAUST FAN SHALL BE INTERLOCKED TO RUN WITH THE SUPPLY AIR FAN.

B. WARM-UP/PULL DOWN
THE UNIT CONTROL SHALL BE ARRANGED FOR A WINTER TIME MORNING WARM-UP CYCLE AND SUMMER PULL DOWN COOLING CYCLE. DURING WARM-UP CYCLE OUTSIDE AIR DAMPER AND EXHAUST AIR DAMPER SHALL REMAIN CLOSED AND THE RETURN AIR DAMPER OPEN UNTIL THE RETURN AIR TEMPERATURE RISES TO 70°F. SIMILARLY FOR PULL DOWN, THE CONDENSING UNIT SHALL BE ENERGIZED UNTIL THE RETURN TEMPERATURE FALLS TO 75°F. AT THAT POINT, THE OUTSIDE AIR DAMPER SHALL OPEN AND THE CONDENSING UNIT SHALL BE PLACED UNDER THE CONTROL OF THE RETURN AIR TEMPERATURE SENSOR AND THE POOL WATER HOT GAS SOLENOID VALVE SHALL BE ENERGIZED.

D. OUTSIDE AIR CONTROL:
OUTSIDE AIR DAMPER SHALL BE SET AT THE SCHEDULED OUTDOOR AIR FLOW RATE.

E. DEHUMIDIFICATION CONTROL:
IF THE SPACE HUMIDITY REACHES 84% (ADJ) RELATIVE HUMIDITY OR ABOVE, THE COMPRESSORS SHALL OPERATE IN THE DEHUMIDIFICATION MODE. IF THE POOL WATER TEMPERATURE SENSOR FALLS BELOW SETPOINT, THE POOL WATER HOT GAS SOLENOID VALVE SHALL BE ENERGIZED. WHEN SPACE RELATIVE HUMIDITY FALLS BELOW 50% (ADJ) RELATIVE HUMIDITY, THE SYSTEM SHALL RETURN TO NORMAL OPERATION. THE DEHUMIDIFICATION CONTROL SEQUENCE SHALL BE ENABLED/DISABLED THROUGH THE EMS.

F. HEATING:
THE HEATING COIL CONTROL VALVE SHALL BE MODULATED TO MAINTAIN SPACE TEMPERATURE SETPOINT OF 86°F (ADJUSTABLE).

G. POOL WATER HEATING MODE:
IF THE POOL WATER TEMPERATURE FALLS BELOW SETPOINT, THE COMPRESSORS SHALL OPERATE IN POOL HEATING MODE. THE POOL WATER HOT GAS SOLENOID VALVE SHALL BE ENERGIZED. IF THE POOL WATER TEMPERATURE CONTINUES TO FALL THE POOL WATER TEMPERATURE SENSOR SHALL CONTROL THE SOLENOID VALVE AND HEATING WATER CONTROL VALVE IN SEQUENCE TO MAINTAIN SETPOINT. WHEN POOL WATER TEMPERATURE REACHES SETPOINT THE HEATING WATER CONTROL VALVE AND POOL WATER HOT GAS SOLENOID VALVE SHALL CLOSE IN SEQUENCE.

3. UNOCCUPIED CYCLE:

A. SUPPLY FAN SHALL BE DE-ENERGIZED, OUTSIDE AIR DAMPERS AND EXHAUST AIR DAMPER SHALL BE CLOSED, EXHAUST AIR FAN SHALL BE DE-ENERGIZED. THE CONDENSING UNIT SHALL BE DE-ENERGIZED.

B. THE SPACE TEMPERATURE SENSOR SHALL RESET TO A REDUCED NIGHT SETBACK TEMPERATURE OF 55°F (ADJUSTABLE). NIGHT SETBACK TEMPERATURE SHALL BE MAINTAINED IN THE SPACE BY CYCLING THE AIR HANDLING UNIT FAN AS A RECIRCULATING UNIT HEATER.

4. BACKFLUSH CYCLE:

A. DURING MAIN FILTER BACKWASH THE PRESSURE SENSOR SHALL STOP PUMP.

INPUT/OUTPUT SUMMARY FOR DIRECT EXPANSION POOL DEHUMIDIFICATION

BUILDING SYSTEM: CONSTANT VOLUME AIR HANDLING SYSTEM

POOL DEHUMIDIFICATION

DESCRIPTION

	INPUTS: ANALOG	INPUTS: BINARY	OUTPUTS: ANALOG	OUTPUTS: BINARY	OUTPUTS: 3-POINT FLOATING	ALARMS	FEATURES
	ROOM TEMPERATURE DUCT TEMPERATURE WATER TEMPERATURE O.A. TEMPERATURE (LATED) STATIC PRESSURE CURRENT SENSOR DIFFERENTIAL PRESSURE POSITION INDICATION FLOW SWITCH STATUS CLOSURE END SWITCH LOW TEMPERATURE CUTOUT	SWITCH POSITION INDICATOR MODULATING ACTUATOR V.A.V. DAMPER VARIABLE SPEED CONTROL RELAY SOLENOID START/STOP 2-POSITION DAMPER MOD. ACTUATOR MERCURY RELAY FEED/BLEED SAV	HIGH LIMIT LOW LIMIT TIME MAINTENANCE MESSAGE SMOKE/FIRE	SCHEDULED START/STOP TEMPERATURE SETBACK/SETUP OPTIMIZED START (ADAPT.) DEMAND LIMITING DUTY CYCLE VENTILATION DELAY ECONOMIZER CYCLE (O.B.) H.W. RESET W/ O.A. TEMP. VAV CONTROL REMOTE SP. RESET LEVEL 4 CONTROL COLOR GRAPHICS POINT LOCKOUT TREND LOG WARM UP/PULL DOWN
DEHUMIDIFICATION UNIT							
COOLING COIL VALVE							
O.A. DAMPER							
FILTER							
RETURN AIR DAMPER							
MIXED AIR							
OUTDOOR AIR (GLOBAL)							
RETURN AIR							
SPACE TEMPERATURE							
SUPPLY AIR							
SUPPLY FAN							
EXHAUST FAN							
WARM-UP/PULL DN							
SMOKE (SUPPLY)							
H-O-A SWITCH							
EXHAUST AIR DAMPER							
FIRE (EXTERNAL)							
SMOKE (S/A AND R/A)							
PUMP							
POOL WATER TEMP							

College of Southern Maryland
Gipe Associates Inc.
Consulting Engineers
Baltimore, Maryland
Easton, Maryland
GAI WO# 01044

THIS DRAWING AND THE DESIGN AND CONSTRUCTION FEATURES DISCLOSED ARE PROPRIETARY TO GIPE ASSOCIATES, INC. AND SHALL NOT BE ALTERED OR REDISED IN WHOLE OR IN PART WITHOUT THE EXPRESS WRITTEN PERMISSION OF GIPE ASSOCIATES, INC. Copyright © 2001

1355 Beverly Rd.
Suite 105
McLean VA 22101
703.903.9100
703.903.9755 Fax

Grimm and Parker Architects

AUTOMATIC TEMPERATURE CONTROLS
SHEET 2
COLLEGE OF SOUTHERN MARYLAND WELLNESS CENTER
LA PLATA, MARYLAND

DATE	DESCRIPTION
12-12-01	DD SUBMITT
2-8-02	DGS SUBMIS
4-11-02	BID SET
4-30-03	BID SET

© GRIMM AND PARKER, P.C.

M8.2

DGS# - CC-09-MC9

RECEIVED
JUN 17 2005

RECEIVED
OCT 25 2004
GIPE ASSOC.

PROJECT RECORD DRAWINGS

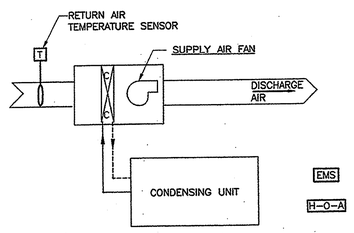

UNIT LOCATED IN 2ND FLOOR STORAGE ROOM.
(PROVIDE IF ADD ALTERNATE NO.4 IS NOT ACCEPTED)

NEW CONTROLS FOR EX SECOND FLOOR SUPPLEMENTAL COOLING UNIT CONTROL DIAGRAM

SCALE: NONE

SEQUENCE OF OPERATION – DDC (ELECTRIC/ELECTRONIC ACTUATION)

THE AIR HANDLING SYSTEM SHALL BE STARTED AND STOPPED THROUGH A SYSTEM ON–OFF–AUTOMATIC (H–O–A) SWITCH. WHEN INDEXED TO "ON" THE SYSTEM SHALL BE ENERGIZED AND OPERATE UNDER ITS CONTROL SEQUENCE. WHEN INDEXED TO "OFF" THE SYSTEM SHALL DEENERGIZE. WHEN INDEXED TO THE "AUTOMATIC" POSITION THE SYSTEM SHALL BE STARTED AND STOPPED THROUGH THE ENERGY MANAGEMENT SYSTEM (EMS). THE H–O–A SYSTEM SWITCH POSITION SHALL BE MONITORED THROUGH THE EMS.

SUPPLY FAN SHALL BE STARTED AND STOPPED BY THE EMS SYSTEM BY WAY OF REMOTE OPTIMUM START/STOP PROGRAM (WITH MANUAL OVERRIDE).

WHEN RETURN AIR IS BELOW 52'F THE CONDENSING UNIT SHALL BE DE–ENERGIZED. WHEN RETURN AIR TEMPERATURE IS 55'F AND ABOVE THE CONDENSING UNIT SHALL BE ENERGIZED.

PROVIDE SIMILAR CONTROLS AS THOSE INDICATED ON DWG M8.1 FOR " TYPICAL SPLIT TYPE DIRECT EXPANSION CONSTANT VOLUME AIR HANDLING UNIT CONTROL DIAGRAM"

UNIT LOCATED IN BOILER ROOM.
(PROVIDE IF ADD ALTERNATE NO.4 IS NOT ACCEPTED)

NEW CONTROLS FOR EX SECOND FLOOR AIR HANDLING UNIT CONTROL DIAGRAM

SCALE: NONE

SEQUENCE OF OPERATION – DDC (ELECTRIC/ELECTRONIC ACTUATION)

DRAWING NOTES:

FOR THE EQUIPMENT INDICATED ON THIS SHEET, ALL EXISTING PNEUMATIC CONTROLS SHALL BE REPLACE WITH NEW DDC CONTROLS. AIR HANDLING UNIT DAMPERS AND VALVES SHALL REMAIN, ACTUATION SHALL BE CHANGE.

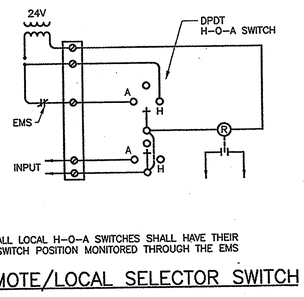

NOTE: ALL LOCAL H–O–A SWITCHES SHALL HAVE THEIR SWITCH POSITION MONITORED THROUGH THE EMS

ATC REMOTE/LOCAL SELECTOR SWITCH

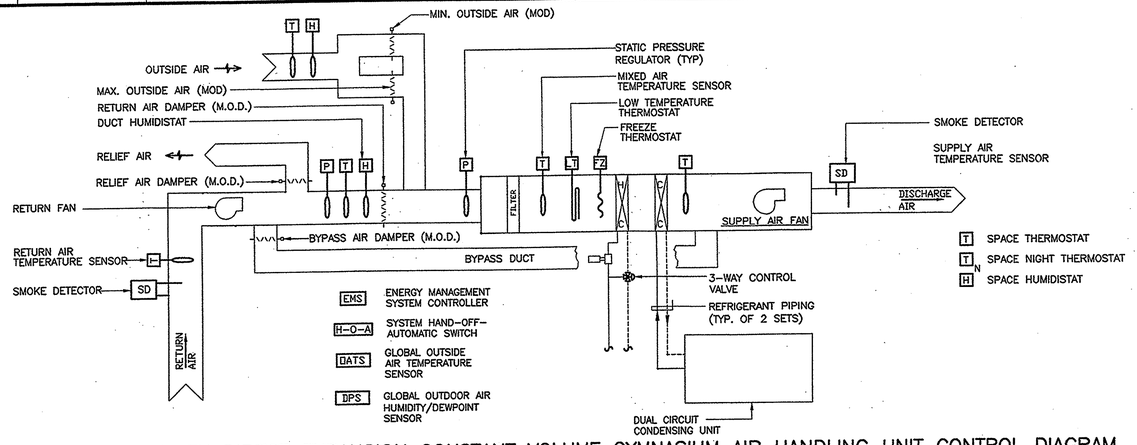

NEW CONTROLS FOR EX DIRECT EXPANSION CONSTANT VOLUME GYMNASIUM AIR HANDLING UNIT CONTROL DIAGRAM

SCALE: NONE

SEQUENCE OF OPERATION – DDC (ELECTRIC/ELECTRONIC ACTUATION)

SEQUENCE OF OPERATION

THE AIR HANDLING SYSTEM SHALL BE STARTED AND STOPPED THROUGH A SYSTEM ON–OFF–AUTOMATIC (H–O–A) SWITCH. WHEN INDEXED TO "ON" THE SYSTEM SHALL BE ENERGIZED AND OPERATE UNDER ITS CONTROL SEQUENCE. WHEN INDEXED TO "OFF" THE SYSTEM SHALL DEENERGIZE. WHEN INDEXED TO THE "AUTOMATIC" POSITION THE SYSTEM SHALL BE STARTED AND STOPPED THROUGH THE ENERGY MANAGEMENT SYSTEM (EMS). THE H–O–A SYSTEM SWITCH POSITION SHALL BE MONITORED THROUGH THE EMS.

SUPPLY FAN SHALL BE STARTED AND STOPPED BY THE EMS SYSTEM BY WAY OF REMOTE OPTIMUM START/STOP PROGRAM (WITH MANUAL OVERRIDE). RETURN AIR AND EXHAUST FAN SHALL BE INTERLOCKED TO OPERATE WITH THE SUPPLY AIR FAN. EXHAUST FAN IS LOCATED IN ROOM 103.

FANS OFF: OUTSIDE, BYPASS AND RELIEF AIR DAMPERS CLOSED; RETURN AIR DAMPER OPEN. EXHAUST AIR FAN OFF; EXHAUST DAMPER CLOSED.

FANS ON: OCCUPIED CYCLE: SUPPLY AND RETURN AIR FANS OPERATE. EXHAUST FAN OPERATES. RELIEF DAMPER IS MODULATED BY STATIC PRESSURE REGULATOR IN RELIEF AIR DUCT TO MAINTAIN CONSTANT STATIC PRESSURE ACROSS THE RETURN DAMPER (+0.2"), ADJUSTABLE. ROOM THERMOSTAT INVERSELY RESETS THE COOLING COIL LEAVING THERMOSTAT TO MODULATE IN SEQUENCE, HOT WATER COIL VALVE, MAXIMUM OUTSIDE AND RETURN DAMPERS, AND COOLING COIL EXPANSION VALVES TO MAINTAIN ROOM TEMPERATURE (80'F), ADJUSTABLE. ENTHALPY CONTROLLER BLOCKS ROOM THERMOSTAT CONTROL OF OUTSIDE AND RETURN AIR DAMPERS WHEN OUTSIDE AIR ENTHALPY IS HIGHER THE RETURN AIR ENTHALPY. ROOM HUMIDISTAT % PERCENT), ADJUSTABLE, AND ROOM THERMOSTAT IS SATISFIED; MODULATES BYPASS AIR DAMPER TO OPEN WHEN ROOM HUMIDITY EXCEEDS SETPOINT (55 BYPASS SIR DAMPER SHALL BE MODULATED TO CLOSED AND RETURN AIR DAMPER TO OPEN WHEN ROOM THERMOSTAT CALLS FOR ADDITIONAL COOLING. COOLING COIL LEAVING THERMOSTAT SHALL BE MAINTAINED AT 54'F SETPOINT UNTIL HUMIDISTAT IS SATISFIED. ROOM HUMIDISTAT SHALL BE BLOCKED FROM CONTROL OF DAMPERS WHEN MECHANICAL COOLING IS NOT OPERATING. MINIMUM OUTSIDE AIR DAMPER REMAINS CLOSED WHEN SYSTEM IS FIRST ON UNTIL ROOM THERMOSTAT REACHES SETPOINT; MINIMUM OUTSIDE AIR DAMPER THEN IS OPENED TO PRESET MINIMUM AIR SETTING AND REMAINS OPEN WHILE FANS ARE OPERATING. INTERLOCKED EXHAUST FAN SHALL BE PREVENTED FROM OPERATING WHEN MINIMUM OUTSIDE AIR DAMPER IS CLOSED. OUTSIDE AIR THERMOSTAT SHALL START HOT WATER CIRCULATING PUMP WHEN OUTSIDE AIR FALLS BELOW 35'F AND STOP THE PUMP WHEN THE OUTSIDE AIR TEMPERATURE RISES ABOVE 40'F. FREEZESTAT AT HEATING COIL DISCHARGE SHALL STOP FANS AND SOUND AUDIBLE ALARM WHEN TEMPERATURE REACHES 36'F. SMOKE DETECTORS SHALL STOP FANS (BOTH GYMNASIUM AHU'S) AND SOUND AUDIBLE ALARM UPON SENSING PRODUCTS OF COMBUSTION.

NIGHT/UNOCCUPIED CYCLE: OUTSIDE, BYPASS AND RELIEF AIR DAMPERS CLOSED. RETURN AIR DAMPER SHALL BE OPEN. EXHAUST FAN DAMPER CLOSED. NIGHT THERMOSTAT STARTS SUPPLY AND RETURN FANS AND ACTIVATES OCCUPIED CYCLE WHEN ROOM TEMPERATURE FALLS TO SETPOINT (50'F), ADJUSTABLE; FANS AND OCCUPIED CYCLE ARE DE–ENERGIZED WHEN TEMPERATURE RISES TO SETPOINT (55'F), ADJUSTABLE.

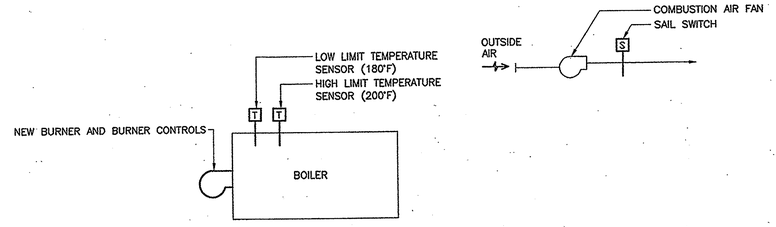

NEW CONTROLS FOR EX BOILER CONTROL DIAGRAM

SCALE: NONE

SEQUENCE OF OPERATION – DDC (ELECTRIC/ELECTRONIC ACTUATION)

1. WHENEVER EITHER BURNER (BOILERS) IS ENERGIZED, THE VENTILATION AIR FAN SHALL BE ENERGIZED TO RUN. WHEN AIR FLOW HAS BEEN VERIFIED BY SUPPLY AIR FLOW SAIL SWITCH, THE BURNER(S) SHALL BE ALLOWED TO ENERGIZE. THIS REQUIRES A NEW INTERLOCK.
2. WHEN BOILER WATER TEMPERATURE, SENSED BT LOW LIMIT TEMPERATURE SENSOR, FALLS BELOW 180'F THE BOILER SHALL START. WHEN BOILER WATER TEMPERATURE, SENSED BY HIGH LIMIT TEMPERATURE SENSOR, REACHES 200'F THE BOILER SHALL STOP OPERATING.
3. PROVIDE ALL INTERLOCKS PER ASME–CSD–1 AND STATE OF MARYLAND BOILER AND PRESSURE VESSEL SAFETY ACT AND REGULATIONS.

college of southern maryland
Gipe Associates Inc.
Consulting Engineers
Baltimore, Maryland
Easton, Maryland
GAI WO# 01044

"THIS DRAWING AND THE DESIGN AND CONSTRUCTION FEATURES DISCLOSED ARE CONFIDENTIAL AND PROPRIETARY TO GIPE ASSOCIATES, INC. AND SHALL NOT BE ALTERED OR REUSED IN WHOLE OR IN PART WITHOUT THE EXPRESS WRITTEN PERMISSION OF GIPE ASSOCIATES, INC. Copyright © 2001

1355 Beverly Rd.
Suite 105
McLean VA 22101
703.903.9100
703.903.9755 Fax
Grimm and Parker Architects

AUTOMATIC TEMPERATURE CONTROLS
SHEET 3
COLLEGE OF SOUTHERN MARYLAND WELLNESS CENTER
LA PLATA, MARYLAND

DATE	DESCRIPTION
12-12-01	DD SUBMITTA
2-8-02	DGS SUBMISSI
4-11-02	BID SET
4-30-03	BID SET

© GRIMM AND PARKER P.C.

M8.3

DGS# - CC-09-MC99-

RECEIVED JUN 17 2005

RECEIVED OCT 25 2004

PROJECT RECORD DRAWINGS

DUCT MOUNTED HEATING COIL SCHEDULE

NO.	SERVICE	TERMINAL HEAT COIL CHARACTERISTICS: EAT DB (°F)	LAT DB (°F)	EWT (°F)	LWT (°F)	GPM@ 20°F ΔT	TOTAL CAP. (MBH)	MAX WPD (FT OF H_2O)	CFM	MAX FACE VELOCITY (FPM)	MAX APD.	COIL SIZE WxH	REMARKS
1	LOBBY	36	90	180	160.0	6.5	18.8	5	1130	500	0.20	26x13	
2	CONCESSION 202	36	85	180	160.0	2.0	19.6	5	370	500	0.20	14x8	(ALTERNATE NO.1)
3	CLASSROOM 103	46	90	180	160.0	3.5	35.6	5	750	500	0.20	18x12	
4	WFS RESOURCE 111	54	95	180	160.0	2.5	25.3	5	570	500	0.20	16x10	
5	WFS OFFICE 113	54	90	180	155.0	1.0	12.7	5	325	500	0.20	12x8	
6	DIR OFFICE/STOR.	54	90	180	163.0	1.0	8.6	5	220	500	0.20	12x6	
7	WC COORD.107	54	80	180	174.0	1.0	3.1	5	110	500	0.20	12x6	
8	FITNESS 104	54	90	180	161.0	9.0	91.0	5	2340	500	0.20	30x21	
9	CORRIDOR 012	54	90	180	160.0	5.0	51.7	5	1330	500	0.20	20x19	
10	SHARED OFF. 219	46.5	85	180	162.0	2.5	22.7	5	545	500	0.20	16x10	(ALTERNATE NO.4)
11	OFFICE 217	46.5	85	180	169.0	1.0	5.4	5	130	320	0.20	10x6	(ALTERNATE NO.4)
12	AQUA MGR/MAIL	46.5	85	180	165.0	1.0	7.5	5	180	440	0.20	10x6	(ALTERNATE NO.4)
13	AQUA DIR 214	46.5	90	180	163.0	1.5	12.7	5	270	410	0.20	16x6	(ALTERNATE NO.4)
14	COORD. 212	46.5	90	180	161.0	2.0	19.0	5	405	460	0.20	16x8	(ALTERNATE NO.4)
15	FACIL. MGR 211	46.5	90	180	162.5	1.0	8.7	5	185	450	0.20	10x6	(ALTERNATE NO.4)
16	OFF. MGR 210	46.5	90	180	161.0	1.0	9.4	5	200	490	0.20	10x6	(ALTERNATE NO.4)
17	SHARED OFF. 216	46.5	80	180	163.0	2.0	16.9	5	455	500	0.20	16x8	(ALTERNATE NO.4)
18	CLASSROOM 205	46.5	80	180	159.5	2.0	21.4	5	590	500	0.20	16x11	(ALTERNATE NO.4)
19	TRAINER 151	75.0	85	180	160.0	0.5	4.9	5	450	505	0.20	16x8	
20	MENS TEAM 150	75.0	85	180	160.0	0.5	4.9	5	450	505	0.20	16x8	
21	MENS LOCKR 141	75.0	80	180	151.5	0.5	7.1	5	1320	670	0.20	26x11	
22	WOMENS LKR 127	75.0	80	180	152.5	0.5	6.9	5	1280	650	0.20	26x11	
23	WOMENS TMS 125	75.0	80	180	169.0	0.5	2.7	5	500	660	0.20	16x8	

FAN SCHEDULE (1)

NO.	SERVICE	LOCATION	DRIVE TYPE	STD AIR CFM	SP (IN H_2O)	HP	RPM	WHEEL DIA.	ELECT. CHAR. V/ø/Hz	FAN TYPE	BASED ON
1	POOL FILTER ROOM EXHAUST	ROOM 122	BELT	3000	1.0	1 1/2	1350	16	460/3/60	INLINE CENTRIFUGAL	GREENHECK BSQ-160 (2)(3)
2	AHU-5 RETURN AIR	MEZZANINE	BELT	920	1.5	3/4	1913	130	460/3/60	INLINE CENTRIFUGAL	GREENHECK BSQ-130 HP
3	AHU-6 RETURN AIR	MEZZANINE	BELT	3300	1.0	1 1/2	1428	160	460/3/60	INLINE CENTRIFUGAL	GREENHECK BSQ-160
4	AHU-4 RETURN AIR	BOILER ROOM	BELT	750	1.0	1/2	1950	90	115/1/60	INLINE CENTRIFUGAL	GREENHECK BSQ-90
5	TOILET EXHAUST	ROOF	DIRECT	200	0.5	1/20	1500	80	115/1/60	UPBLAST	GREENHECK CUE-80
6	JANITOR EXHAUST	ROOM 120	BELT	200	0.75	1/4	1424	101	115/1/60	UPBLAST	GREENHECK BSQ-140 (ALTERNATE NO.4)
7	AHU-8 RETURN AIR	BOILER ROOM	BELT	2800	1.2	1 1/2	1835	140	460/3/60	INLINE CENTRIFUGAL	GREENHECK CUBE-100 HP
8	CONCESSION EXHAUST	ROOF	BELT	420	0.75	1/4	1604	100	115/1/60	UPBLAST	GREENHECK CUBE-100 HP

(1) ALL DIRECT DRIVE FANS SHALL BE PROVIDED WITH SOLID STATE SPEED CONTROLLERS.

(2) PROVIDE TWO SPEED FAN WITH 1/2 SPEED REDUCTION.

(3) PROVIDE SPECIAL COATING INSIDE AND OUTSIDE OF FAN.

LINEAR SLOT DIFFUSER SCHEDULE (1)

NO.	CFM	No. OF SLOTS	SLOT WIDTH (INCHES)	TOTAL LENGTH (FT)	COLLAR OR INLET SIZE (ø)	REMARKS
L1	205	2	1/2	10	8"ø	PROVIDE 12"H PLENUM
L2	205	2	1/2	8	8"ø	PROVIDE 96"Lx18"Wx4"H PLENUM
L3	315	2	1/2	10	9"ø	PROVIDE 12"H PLENUM
L4	440	3	1/2	12	12x4	PROVIDE 12"H PLENUM

(1) FOR LINEAR SLOT DIFFUSERS LOCATED BETWEEN ARCHITECTURAL OR STRUCTURAL ELEMENTS, SIZE SHALL BE COORDINATED WITH THOSE ELEMENTS.

AIR DEVICE SCHEDULE

NO.	CFM RANGE MIN.	CFM RANGE MAX.	NECK SIZE	COLLAR ø SIZE	TYPE (SEE SPEC.)
SUPPLY AIR DEVICE					
S1	0	200	9x9	–	TITUS TDC
S2	201	300	12x12	–	TITUS TDC
S3	301	500	15x15	–	TITUS TDC
S4	0	200	10x6	–	TITUS 300R
RETURN AIR DEVICE					
R1	0	350	12x12	–	TITUS 350 FL
R2	0	1000	20x20	–	TITUS 350 FL
R3	0	6100	46x24	–	TITUS 50 F
R4	0	10000	60x48	–	TITUS 33 RL
R5	0	14000	72x48	–	TITUS 33 RL
EXHAUST AIR DEVICE					
E1	0	400	12x12	–	TITUS 350 FL
E2	401	1000	20x20	–	TITUS 350 FL
E3	0	7500	60x20	–	TITUS 350 FL
TRANSFER AIR DEVICE					
T1	–	–	20x20	–	TITUS 350 FL
T2	–	–	12x12	–	TITUS 350 FL

1. ALL SUPPLY AIR DIFFUSERS SHALL BE 4-WAY BELOW UNLESS OTHERWISE SHOWN ON THE DRAWINGS.
2. ALL SUPPLY AIR REGISTERS SHALL BE DOUBLE DEFLECTION WITH FRONT BLADES PARALLEL TO THE SHORT DIMENSION (VERTICAL)
3. PROVIDE 24x24 MODULE FOR ALL LAY-IN AIR DEVICES. TRIM MODULE AS NECESSARY TO FIT INTO GRID IF LESS THAN 24x24 IS AVAILABLE.
4. NOT ALL AIR DEVICES SCHEDULED MAY BE USED.

LEGEND

SYMBOL	ABBREV.	DEFINITION
	S/A	SUPPLY AIR DUCT UP,DOWN
	R/A	RETURN AIR DUCT UP,DOWN
	E/A	EXHAUST AIR DUCT UP,DOWN
	O/A	OUTSIDE AIR DUCT UP,DOWN
		RECT. TO ROUND TRANSITION
		FLEXIBLE CONNECTION (DUCTWORK)
		FLEXIBLE DUCT
	VD	MANUAL VOLUME DAMPER
	FD	FIRE DAMPER
	MOD	MOTOR OPERATED DAMPER
	AMS	AIR MONITORING STATION
		SOUND ATTENUATOR
S	SD	DUCT SMOKE DETECTOR
		ELBOW W/ TURNING VANES
		RADIUS ELBOW
		FAN POWERED VAV BOX W/ HEAT COIL
		ACOUSTICAL LINING
		DUCT TRANSITION
		CHANGE IN ELEVATION RISE(R),DROP(D)
		POWER ROOF VENTILATOR
		GATE VALVE
		GLOBE VALVE
		BALL VALVE
		BALANCING VALVE
		MULTIPURPOSE VALVE
		CHECK VALVE
		BUTTERFLY VALVE
		3-WAY MODULATING VALVE (ATC)
		2-WAY MODULATING VALVE (ATC)
		PRESSURE REDUCING VALVE
		NEEDLE VALVE
		PRESSURE RELIEF OR SAFETY VALVE
		HOSE END DRAIN VALVE
		STRAINER W/HOSE END DRAIN VALVE AND CAP
		AUTOMATIC AIR VENT
		FLOW METER FITTING
		COMBINATION SHUT-OFF/BALANCING VALVE
		UNION
		FLANGE
		CONCENTRIC REDUCER
		ECCENTRIC REDUCER
		FLEXIBLE CONNECTION (PIPING)
		MANUAL AIR VENT
		THERMOMETER
		PRESSURE GAUGE W/NEEDLE VALVE
T		TEMPERATURE SENSOR
T	T'STAT	THERMOSTAT
S		FAN SWITCH
		STATIC PRESSURE GAUGE
DP	D.P.	DIFFERENTIAL PRESSURE CONTROLLER
DPT	D.P.T.	DIFFERENTIAL PRESSURE TRANSMITTER
	A.F.C	AUTOMATIC FLOW CONTROL VALVE
	FS	FLOW SWITCH
S SP	S.P.	STATIC PRESSURE CONTROLLER
		PIPE ALIGNMENT GUIDE
		PIPE ANCHOR
		EXPANSION LOOP
		UNIT HEATER
		PITCH OF PIPE, RISE(R), DROP(D)
		PIPE-TURN DOWN
		PIPE-TURN UP
S		SOLENOID VALVE
		END CAP
		BLIND FLANGE
		DIRECTION OF FLOW
ø	DIA.	DIAMETER
H&B FLOW		RETURN AIR REGISTER W/ BOOT
	F.O.T.	FLAT ON TOP
	F.O.B.	FLAT ON BOTTOM

SYMBOL	ABBREV.	DEFINITION
P.H.R.	P.H.R.	POOL WATER RETURN
P.H.S.	P.H.S.	POOL WATER SUPPLY
H.R.(P)	H.R.(P)	HEATING RETURN (PRIMARY)
H.S.(P)	H.S.(P)	HEATING SUPPLY (PRIMARY)
H.R.(S)	H.R.(S)	HEATING RETURN (SECONDARY)
H.S.(S)	H.S.(S)	HEATING SUPPLY (SECONDARY)
G	G	NATURAL GAS
C.H.S.(P)	C.H.S.(P)	CHILLED WATER SUPPLY (PRIMARY)
C.H.R.(P)	C.H.R.(P)	CHILLED WATER RETURN (PRIMARY)
C.H.S.(S)	C.H.S.(S)	CHILLED WATER SUPPLY (SECONDARY)
C.H.R.(S)	C.H.R.(S)	CHILLED WATER RETURN (SECONDARY)
S.P.	S.P.	SPRINKLER PIPING
CW	CW	COLD WATER
HW	HW	DOMESTIC HOT WATER(TEMP.)
HWC	HWC	HOT WATER RECIRC.(TEMP.)
F	F	FIRE LINE
SD	SD	STORM DRAIN
SAN	SAN	SANITARY
V	V	VENT
D	D	DRAIN LINE
	BTU	BRITISH THERMAL UNIT
	MBH	BTU PER HOUR (THOUSAND)
	SENS.	SENSIBLE
	BHP	BOILER HORSEPOWER
	WG	WATER GAUGE
	VEL	VELOCITY
	FPM	FEET PER MINUTE
	LF	LINEAR FOOT
	KW	KILOWATT
	MIN.	MINIMUM
	MAX.	MAXIMUM
	NC	NOISE CRITERIA
	DB	DECIBEL
	LBS.	POUNDS
	TEMP.	TEMPERATURE
	EXH.	EXHAUST
	SPLY.	SUPPLY
	TONS	TONS OF REFRIGERATION
	SQ.	SQUARE
	WTR.	WATER
	OAT	OUTSIDE AIR TEMPERATURE
	STD.	STANDARD
	ΔT	TEMPERATURE DIFFERENCE
	%	PERCENT
	EFF.	EFFICIENCY
	ELECT. CHAR.	ELECTRICAL CHARACTERISTICS
	CAP	CAPACITY
	SB	STAND-BY
	FT. H 2 O	FEET WATER GAUGE
	IN. H 2 O	INCHES WATER GAUGE
	ATC	AUTOMATIC TEMPERATURE CONTROL
	EX.	EXISTING
	R.X.	REMOVE EXISTING
	VSD	VARIABLE SPEED DRIVE
	°F	DEGREES FAHRENHEIT
	CFM	CUBIC FEET PER MINUTE
	GPM	GALLONS PER MINUTE
	EAT	ENTERING AIR TEMPERATURE
	LAT	LEAVING AIR TEMPERATURE
	EWT	ENTERING WATER TEMPERATURE
	LWT	LEAVING WATER TEMPERATURE
	DB	DRY BULB
	WB	WET BULB
	PD	PRESSURE DROP
	WPD	WATER PRESSURE DROP
	APD	AIR PRESSURE DROP
	SP	STATIC PRESSURE
	ESP	EXTERNAL STATIC PRESSURE
	PSI	POUNDS PER SQUARE INCH
	HP	HORSEPOWER
	BHP	BRAKE HORSEPOWER
	RPM	REVOLUTIONS PER MINUTE
	FPM	FEET PER MINUTE
	V	VOLTS
	HZ	HERTZ
	DIFF.	DIFFUSER
	REG.	REGISTER
	AFF	ABOVE FINISHED FLOOR
	W/	WITH
F.O.	S.S.	STAINLESS STEEL
	HT.	HEIGHT
	REQ'D.	REQUIRED
	DWG.	DRAWING
	NO.	NUMBER
	VAV	VARIABLE AIR VOLUME
	E.F	EXHAUST FAN
	FZ	FREEZE STAT
	SD	SMOKE DAMPER
	SPC	STATIC PRESSURE CONTROLLER
	AHU	AIR HANDLING UNIT
	OAT	OUTSIDE AIR TEMPERATURE
	SWT	SUPPLY WATER TEMPERATURE
	NO	NORMALLY OPEN
	NC	NORMALLY CLOSED
	E.M.S.	ENERGY MANAGEMENT SYSTEM
	S.A.F.	SUPPLY AIR FAN
	O.A.F.	OUTSIDE AIR FAN
	R.A.F.	RETURN AIR FAN
CS	CS	CONDENSER WATER
CR	CR	CONDENSER WATER RETURN
	FCU	FAN-COIL UNIT
	UH	UNIT HEATER
	CONV.	CONVECTOR
	BBR	BASEBOARD RADIATION
	P.A.	PRIMARY AIR

NOTE: NOT ALL SYMBOLS AND ABBREVIATIONS MAY BE USED.

MECHANICAL EQUIPMENT NOTES

1. AIR COOLED SPLIT SYSTEM No. 4
ADDITION LOBBY SYSTEM

AHU No. 4 – INDOOR AIR HANDLING UNIT
MAX WEIGHT: 550 LBS

SUPPLY AIR FAN:
1500 CFM @ 1.5 IN W.C. E.S.P.
890 CFM O/A
2 HP @ 1240 RPM
460v/3ø/60Hz

COOLING COIL (R-22):
85.0°F EAT DB, 71.0°F EAT WB
54.0°F LAT DB, 53.5°F LAT WB
50.3 MBH SENSIBLE CAPACITY
84.4 MBH TOTAL CAPACITY
300 FPM MAX. FACE VELOCITY
45°F SATURATED SUCTION TEMPERATURE
SPLIT EVAPORATOR FACE

MAGIC AIR MODEL 60 BHX

ACCU No. 4 – AIR COOLED CONDENSING UNIT
8 TONS NOMINAL CAPACITY
R-22 REFRIGERANT
90.1 MBH CAPACITY
95°F ENTERING CONDENSER AIR TEMPERATURE
40°F SATURATED SUCTION TEMPERATURE
HERMETIC COMPRESSOR
CAPACITY STEPS: 100%
1 CONDENSER FAN @ 6,500 CFM TOTAL
3/4 MOTOR HP @ 1100 RPM
460v/3ø/60Hz ELECTRICAL CHARACTERISTICS
15.7 RLA – COMPRESSOR
80.0 LRA – COMPRESSOR
21.5 MINIMUM CIRCUIT AMPS – POWER SUPPLY
30 AMPS MAXIMUM OVER CURRENT PROTECTION
7.51 KW TOTAL COOLING

CARRIER MODEL 38 AK 08 OR AS APPROVED EQUAL OF McQUAY OR LENNOX

2. AIR COOLED SPLIT SYSTEM No. 5
ADDITION OFFICE SYSTEM

AHU No. 5 – INDOOR AIR HANDLING UNIT
MAX WEIGHT: 250 LBS

SUPPLY AIR FAN:
1255 CFM @ 1.5 IN W.C. E.S.P.
315 CFM O/A
1 1/2 HP @ 1725 RPM
460v/3ø/60Hz

COOLING COIL (R-22):
80.0°F EAT DB, 66.0°F EAT WB
54.5°F LAT DB, 54.0°F LAT WB
33.8 MBH SENSIBLE CAPACITY
46.9 MBH TOTAL CAPACITY
411 FPM MAX. FACE VELOCITY
40°F SATURATED SUCTION TEMPERATURE
SPLIT EVAPORATOR FACE

MAGIC AIR MODEL 36 BHX

ACCU No. 5 – AIR COOLED CONDENSING UNIT
4 TONS NOMINAL CAPACITY
R-22 REFRIGERANT
48 MBH CAPACITY
95°F ENTERING CONDENSER AIR TEMPERATURE
40°F SATURATED SUCTION TEMPERATURE
5.4 KW COMPRESSOR MOTOR INPUT
SCROLL COMPRESSOR
1 CONDENSER FAN
1/4 MOTOR HP
460v/3ø/60Hz ELECTRICAL CHARACTERISTICS
7.1 RLA – COMPRESSOR
52.5 LRA – COMPRESSOR
9.7 MINIMUM CIRCUIT AMPS – POWER SUPPLY
15 AMPS MAXIMUM OVER CURRENT PROTECTION

CARRIER MODEL 38 CKC 048 OR AS APPROVED EQUAL OF McQUAY OR LENNOX

3. AIR COOLED SPLIT SYSTEM No. 6
ADDITION FITNESS SYSTEM

AHU No. 6 – INDOOR AIR HANDLING UNIT
MAX WEIGHT: 600 LBS

SUPPLY AIR FAN:
3670 CFM @ 1.5 IN W.C. E.S.P.
590 CFM O/A
5 HP @ 1025 RPM
460v/3ø/60Hz

COOLING COIL (R-22):
78.2°F EAT DB, 66.0°F EAT WB
54.5°F LAT DB, 54.0°F LAT WB
95.2 MBH SENSIBLE CAPACITY
132.2 MBH TOTAL CAPACITY
359 FPM MAX. FACE VELOCITY
40°F SATURATED SUCTION TEMPERATURE
SPLIT EVAPORATOR FACE

MAGIC AIR MODEL 120 BHX

ACCU No. 6 – AIR COOLED CONDENSING UNIT
10 TONS NOMINAL CAPACITY
R-22 REFRIGERANT
116 MBH CAPACITY
95°F ENTERING CONDENSER AIR TEMPERATURE
40°F SATURATED SUCTION TEMPERATURE
9.7 KW COMPRESSOR MOTOR INPUT
SEMI-HERMETIC COMPRESSOR W/ ELECTRIC UNLOADER
CAPACITY STEPS: 33%, 66%, 100%
2 CONDENSER FANS @ 11,000 CFM TOTAL
1/2 MOTOR HP @ 1075 RPM
460v/3ø/60Hz ELECTRICAL CHARACTERISTICS
20.0 RLA – COMPRESSOR
77.0 LRA – COMPRESSOR
2.3 FLA COND. FAN 1, 1.9 FLA COND. FAN 2
1.41 KW, SINGLE PHASE FAN MOTORS
29.1 MINIMUM CIRCUIT AMPS – POWER SUPPLY
81 MAXIMUM INSTANTANEOUS CURRENT FLOW
40 AMPS MAXIMUM OVER CURRENT PROTECTION
11.9 KW TOTAL COOLING

CARRIER MODEL 38 AKS 013 OR AS APPROVED EQUAL OF McQUAY OR LENNOX

4. AIR COOLED SPLIT SYSTEM No. 8 (ADD ALT. NO.4)
SECOND FLOOR OFFICE SYSTEM

AHU No. 8 – INDOOR AIR HANDLING UNIT
MAX WEIGHT: 550 LBS

SUPPLY AIR FAN:
2970 CFM @ 1.5 IN W.C. E.S.P.
1040 CFM O/A
2 HP @ 999 RPM
460v/3ø/60Hz

COOLING COIL (R-22):
82.0°F EAT DB, 68.5°F EAT WB
55.0°F LAT DB, 54.5°F LAT WB
86.6 MBH SENSIBLE CAPACITY
129.7 MBH TOTAL CAPACITY
414 FPM MAX. FACE VELOCITY
40°F SATURATED SUCTION TEMPERATURE
SPLIT EVAPORATOR FACE

MAGIC AIR MODEL 90 BHX

ACCU No. 8 – AIR COOLED CONDENSING UNIT
10 TONS NOMINAL CAPACITY
R-22 REFRIGERANT
116 MBH CAPACITY
95°F ENTERING CONDENSER AIR TEMPERATURE
40°F SATURATED SUCTION TEMPERATURE
9.7 KW COMPRESSOR MOTOR INPUT
SEMI-HERMETIC COMPRESSOR W/ ELECTRIC UNLOADER
CAPACITY STEPS: 33%, 66%, 100%
2 CONDENSER FANS @ 11,000 CFM TOTAL
1/2 MOTOR HP @ 1075 RPM
460v/3ø/60Hz ELECTRICAL CHARACTERISTICS
20.0 RLA – COMPRESSOR
77.0 LRA – COMPRESSOR
2.3 FLA COND. FAN 1, 1.9 FLA COND. FAN 2
1.41 KW, SINGLE PHASE FAN MOTORS
29.1 MINIMUM CIRCUIT AMPS – POWER SUPPLY
81 MAXIMUM INSTANTANEOUS CURRENT FLOW
40 AMPS MAXIMUM OVER CURRENT PROTECTION
11.9 KW TOTAL COOLING

CARRIER MODEL 38 AKS 013 OR AS APPROVED EQUAL OF McQUAY OR LENNOX

GENERAL DRAWING NOTES: (APPLY TO ALL DRAWINGS)

1. THE LOCATION OF EXISTING UNDERGROUND UTILITIES IS SHOWN IN AN APPROXIMATE WAY ONLY. DETERMINE THE EXACT LOCATION OF ALL EXISTING UTILITES BEFORE COMMENCING WORK. REPAIR ALL DAMAGES OCCASIONED BY FAILURE TO EXACTLY LOCATE AND PRESERVE ANY AND ALL UNDER GROUND UTILITIES.
2. PROVIDE AN AIR VENT AT THE TOP OF ALL RISERS AND AT THE HIGH POINT OF EACH DROP IN THE HEATING WATER SYSTEM.
3. UNLESS OTHERWISE NOTED, ALL DUCTWORK AND PIPING IS OVERHEAD, TIGHT TO UNDERSIDE OF STRUCTURE WITH SPACE FOR INSULATION IF REQUIRED.
4. INSTALL DUCTWORK SO THAT ALL DAMPERS ARE ACCESIBLE.
5. COODINATE ALL MECHANICAL WORK WITH ELECTRICAL WORK ETC., SHOWN ON OTHER DRAWINGS.
6. MAINTAIN MINIMUM 6'-8" CLEARANCE TO UNDERSIDE OF PIPES, DUCTS, CONDIUT, SUSPENDED EQUIPMENT, ETC., THROUGHOUT ACCESS ROUTES IN MECHANICAL AND ELECTRICAL ROOMS.
7. CERTAIN ITEMS SUCH AS ACCESS DOORS, RISE AND DROPS IN DUCTWORK AND PIPING, ETC. , ARE INDICATED ON THE DRAWINGS FOR CLARITY OR A SPECIFIC LOCATION REQUIREMENT AND SHALL NOT BE INTERPRETED AS THE EXTENT OF REQUIREMENTS FO THESE ITEMS. THE CONTRACTOR SHALL BE RESPONSIBLE FOR THESE ITEMS AS REQUIRED ELSEWHERE IN THE CONTRACT DOCUMENTS.
8. WHERE THE INSTALLATION OF NEW SERVICES OR THE EXTENSION OF EXISTING SERVICES REQUIRE CUTTING OF EXISTING FLOORS, WALLS, PARTITIONS, ETC., IT SHALL BE THE RESPONSIBILITY OF THE CONTRACTOR TO CHECK FOR THE PRESENCE OF EXISTING MECHANICAL AND/OR ELECTRICAL SERVICES WITHIN OR IMMEDIATELY BENEATH CONSTRUCTION AND EXERCISE NECESSARY PRECAUTIONS TO PREVENT DAMAGE TO THE SERVICES OR INJURY TO HIS PERSONNEL DUE TO CONTACT WITH SAME. WHERE PRACTICAL, SUCH EXISTING SERVICES SHALL BE TEMPORARILY DISCONNECTED DURING THE CUTTING OPERATION. SUCH OUTAGES IN SERVICE SHALL BE SCHEDULED IN ADVANCE WITH THE OWNER.
9. FLOW SCHEMATIC AND RISER DIAGRAMS INDICATE FLOW AND OPERATION CONCEPT AS WELL AS GENERAL ARRANGEMENT OF EQUIPMENT, VALVES, PRESSURE GAUGES, ETC. ARE INDICATED FOR THIS PURPOSE, ADDITIONAL VALVES, PRESSURE GAUGES, ETC. SHALL BE PROVIDED AS SHOWN ON VARIOUS EQUIPMENT DETAILS. SEE PLANS AND DETAILS FOR PIPE SIZES NOT INDICATED ON FLOW SCHEDULE AND RISER DIAGRAMS.

5. DEHUMIDIFICATION SYSTEM
SERVES SWIMMING POOL
POOL: PUBLIC

86°F DB AIR TEMP
60% RH (OCCUPIED)
50% RH (UNOCCUPIED
84°F WATER TEMP
3360 SQ FT POOL AREA
3250 SQ FT DECK AREA
30 OCCUPANTS
12 HR/DAY (OCCUPIED)
185,640 CUBIC FT

EVAPORATOR:
12400 CFM SUPPLY AIR
3315 CFM OUTSIDE AIR
161 #/HR TOTAL AVERAGE EVAPORATION AND LATENT HEAT LOAD
60 GPM FLOW RATE @15 FT MAX WPD.
1.5" ESP
95A MINIMUM AMPACITY
125A MAXIMUM MAIN FUSE

CONDENSER:
460V/3PH/60HZ
9.8 MIN. CIRCUIT AMPS
15 AMP MAX. FUSE SIZE
95°F DB AMBIENT TEMP
78°F WB AMBIENT TEMP

HEATING WATER COIL:
468,700 BTUH
64.5°F EAT
99.0°F LAT
190°F EWT
170°F LWT
47.0 GPM
0.25" S.P.
5.0 FT WPD

MANUFACTURER:
DECTRON DS-150 OR AS APPROVED EQUAL.

6. PUMP-1
SERVICE: POOL WATER
CAPACITY: 60 GPM
HEAD IN FEET: 40
MOTOR: 2 HP
RPM: 1750
ELECTRICAL: 460/3/60
MANUFACTURER: TACO 1600 SERIES

7. SHELL AND TUBE HEAT EXCHANGER
WATER TO WATER-1 PASS
600 MBH HEAT TRANSFER
TUBE SIDE (POOL WATER)
354 GPM FLOW RATE
81.4°F ENTERING WATER TEMPERATURE
85.0°F LEAVING WATER TEMPERATURE
4.3 FPS TUBE VELOCITY
1.0 FT. MAX WPD
.0005 FOULING FACTOR
SHELL SIDE (BOILER WATER)
60 GPM FLOW RATE
190°F ENTERING WATER TEMPERATURE
168.3°F LEAVING WATER TEMPERATURE
2.01 FPS TUBE VELOCITY
1.0 FT. MAX WPD
.0005 FOULING FACTOR
10"ø x 2'-0" LONG
BASED ON TACO G10104

8. PACKAGED HEAT RECOVERY ROOF MOUNTED AHU-7
PACKAGED ROOFTOP TYPE – CONSTANT VOLUME
SERVES LOCKER ROOMS
20 TON NOMINAL CAPACITY
95°F AMBIENT TEMPERATURE
4300 LBS. MAXIMUM OPERATING WEIGHT
PREFABRICATED ROOF CURB
(14" MIN. HT ABOVE ROOF)
OUTSIDE AIR: 4700 CFM
DIRECT DIGITALLY CONTROLLED

SUPPLY AIR FAN:
MAX: 4700 CFM @ 2.1 ESP
7 1/2 HP MOTOR @ 1350 RPM

ENERGY RECOVERY:
SUMMER CONDITIONS:
SUPPLY AIR:
4700 CFM
95°F EAT DRY BULB
78°F EAT WET BULB
80.8° LAT DRY BULB
67.5° LAT WET BULB

EXHAUST AIR:
4500 CFM
75°F EAT DRY BULB
62°F EAT- WET BULB

WINTER CONDITIONS:
SUPPLY AIR:
11°F EAT DRY BULB
56.5°F LAT DRY BULB

EXHAUST AIR:
75°F EAT DRY BULB

POWER EXHAUST FAN:
4500 CFM @ 2.0" ESP
5 HP MOTOR

COOLING COIL CONDITIONS:
4700 CFM
230.5 MBH TOTAL CAPACITY
146.2 MBH SENSIBLE CAPACITY
80.8°F EAT DRY BULB
67.5°F EAT WET BULB
52.0°F LAT DRY BULB
51.5°F LAT WET BULB
17.33 SQ FT MIN COIL AREA

HEATING CONDITIONS:
4700 CFM
93.9 MBH OUTPUT CAPACITY
56.5°F EAT DRY BULB
75°F LAT DRY BULB
9.5 GPM @ 180°F EWT, 160°F LWT

ELECTRICAL CHAR: 460V/3ø/60HZ
MANUFACTURER: AAON INC SERIES RK OR AS APPROVED EQUAL

9. DUCTLESS SPLIT A/C SYSTEMS
GENERAL: BASED ON MITSUBISHI ELECTRIC MR. SLIM WITH ADVANCED MICROPROCESSOR CONTROLLER, LOW AMBIENT CONTROL (COOLING TO 0°F OUTDOOR AIR TEMPERATURE) AND DEHUMIDIFICATION CONTROL. PROVIDE WHERE INDICATED ON DRAWINGS.

CAPACITY:
18000 BTUH TOTAL COOLING CAPACITY
80°F DB/67°F WB INDOOR ENTERING AIR
95°F DB/75°F WB OUTDOOR ENTERING AIR

INDOOR EVAPORATOR UNIT:
WALL MOUNTED
115V/1ø/60Hz
600 CFM
15 AMP MAX FUSE SIZE
1" CO CONNECTION
MODEL PK18FK1

OUTDOOR CONDENSING UNIT:
208V/1ø/60Hz
25 AMP MAX FUSE SIZE
MODEL PUG18AKB

Grimm and Parker Architects
College of Southern Maryland
Gipe Associates Inc. Consulting Engineers
Baltimore, Maryland
Easton, Maryland
GAI WO# 01044
1355 Beverly Rd. Suite 105 McLean VA 22101
703.903.9100 703.903.9755 Fax

THIS DRAWING AND THE DESIGN AND INFORMATION CONTAINED THEREON ARE THE PROPRIETARY PROPERTY OF GIPE ASSOCIATES, INC. AND SHALL NOT BE USED, ALTERED OR REUSED IN WHOLE OR IN PART WITHOUT THE EXPRESS WRITTEN PERMISSION OF GIPE ASSOCIATES, INC. Copyright © 2003

MECHANICAL EQUIPMENT NOTES, SCHEDULES, AND LEGEND
COLLEGE OF SOUTHERN MARYLAND WELLNESS CENTER

DATE	DESCRIPTION
12-12-01	DD SUBMITTAL
2-8-02	DGS SUBMISSION
4-11-02	BID SET
4-30-03	BID SET

© GRIMM AND PARKER, P.C.

M9.1

DGS# - CC-09-MC

RECEIVED JUN 17 2005

PROJECT RECORD DRAWINGS

RECEIVED OCT 25 2004 GIPE ASSOC.

Gipe Associates, Inc.
CONSULTING ENGINEERS

RESPOND TO:
BALTIMORE
EASTON

SHOP DRAWING COMMENTS

W.O.#01044

College of Southern Maryland – Wellness Center (P.E. Building)
Shop Drawing No. E-22: Electrical Testing – Voice/Data/Fiber Test Results
Voice/Data/Fiber Record Drawings & Electrical O & M Manual (Revised)

- ■ REVIEWED
- □ COMMENTS NOTED
- □ REJECTED
- □ REVISE AND RESUBMIT
- □ RESUBMIT AS SPECIFIED
- □ RESUBMIT FOR RECORD ONLY
- □ FOR INFORMATION ONLY/NOT REVIEWED

This review is only for general conformance with the design concept of the project and general compliance with the information given in the Contract Documents and does not include review of quantities, dimensions, weights or gauges, fabrication processes, sequence of work, construction methods, coordination with the work of other trades, or construction safety precautions all of which are the responsibility of the Contractor. Corrections or comments made on or attached to the shop drawings (or the absence of corrections and comments) during this review in no way relieves the Contractor from complying with the requirements of the Contract Drawings.

Engineer's Comments:

No comments.

Processed by: JFK Date: 05/19/05

Baltimore
849 Fairmount Avenue, Suite 102
Baltimore, Maryland 21286
410-832-2400 TEL
410-832-2418 FAX

Easton
8659 Commerce Drive, PO Box 1147
Easton, Maryland 21601
410-822-8888 TEL
410-822-6306 FAX

DRAWING NOTES:

1. EX 24 PORT FIBER OPTIC TERMINATION UNIT. RELOCATE TO NEW MDF.
2. EX FIBER OPTIC TERMINATION UNIT WITH ETHERNET TRANSCEIVER. RELOCATE TO NEW MDF
3. PROVIDE CATEGORY 5E VOICE BACKBONE CABLES. SIZE FOR 50% SPARE CAPACITY (PLUS 100 % OF ALL VOICE DROPS INDICATED). MINIMUM OF 150 PAIRS SHALL BE PROVIDED BETWEEN IDF & MDF.
4. PROVIDE 25 PAIR CATEGORY 5E DATA CABLES FOR COMPRESSED VIDEO SERVICE BETWEEN IDF AND MDF.
5. PROVIDE FIBER OPTIC TERMINATION ENCLOSURE.
6. PROVIDE CATEGORY 5E DATA PATCH PANEL.
7. PROVIDE 110 BLOCKS, QUANTITY AS REQUIRED.
8. REFER TO DETAILS FOR ADDITIONAL WIRING INFORMATION.
9. PROVIDE 200 PAIR CATEGORY 5E VOICE BACKBONE CABLES FROM MDF TO MPOP.

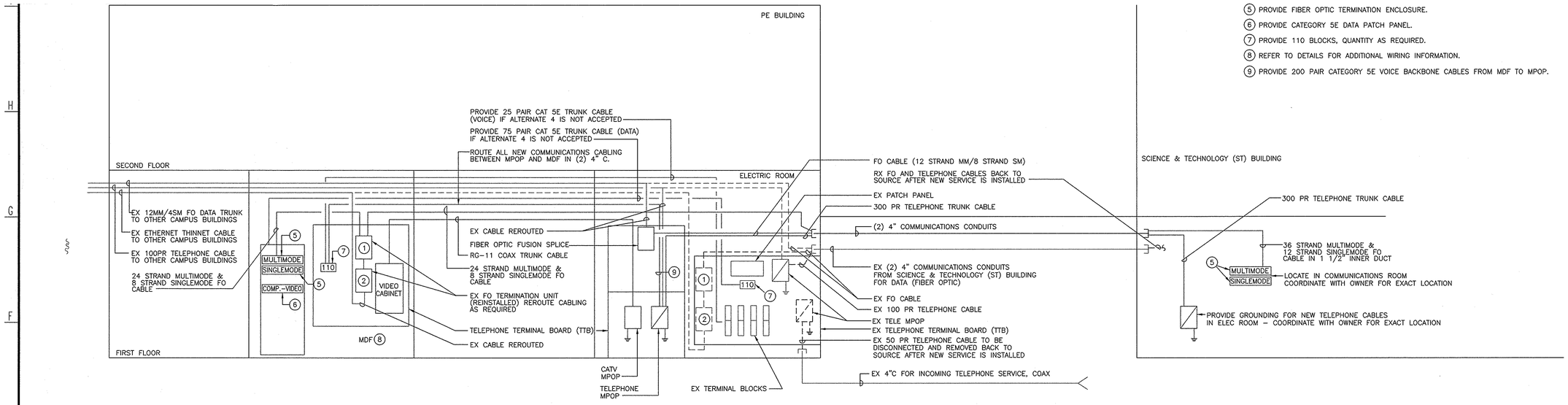

VOICE/DATA/VIDEO SYSTEM BACKBONE RISER DIAGRAM
SCALE: NONE

College of Southern Maryland

Gipe Associates Inc.
Consulting Engineers
Baltimore, Maryland
Easton, Maryland
GAI WO# 01044

"THIS DRAWING AND THE DESIGN AND CONSTRUCTION FEATURES DISCLOSED ARE PROPRIETARY TO GIPE ASSOCIATES, INC. AND SHALL NOT BE ALTERED OR REUSED IN WHOLE OR IN PART WITHOUT THE EXPRESS WRITTEN PERMISSION OF GIPE ASSOCIATES, INC. Copyright © 2001"

Grimm and Parker Architects
1355 Beverly Rd.
Suite 105
McLean VA 22101
703.903.9100
703.903.9755 Fax

COLLEGE OF SOUTHERN MARYLAND WELLNESS CENTER
LA PLATA, MARYLAND

DATE	DESCRIPTION
12-12-0	DD SUBMITTAL
2-8-02	DGS SUBMISSION
4-11-02	BID SET
4-30-03	BID SET

RECEIVED
MAY 10 2005
DGS/OPDC

PROJECT RECORD DRAWINGS

Firm Name and Address
FIBERPLUS
8240 PRESTON COURT, SUITE C
JESSUP, MD 20794
Tel: (301) 317-3300 Fax: (301) 317-8585
www.fiberplusinc.com

Project Name and Address
COLLEGE OF SOUTHERN MARYLAND WELLNESS CENTER
LA PLATA
MARYLAND

Revisions

NO.	DATE	Description
1		
2		

Project	Network Wiring Plan
Sole Eginner	Will Ruffin
Sole Engineer's E-mail	Wruffin@fiberplusinc.com
Sole Engineer's Extension	150
Scale	NTS
Date	2/13/04
Drawn By	
Sheet	N-1

© GRIMM AND PARKER,P.C. 2001

DGS# - CC-09-MC99-3

Gipe Associates, Inc.
CONSULTING ENGINEERS

RESPOND TO:
BALTIMORE■
EASTON□

SHOP DRAWING COMMENTS

W.O.#01044

College of Southern Maryland – Wellness Center (P.E. Building)
Shop Drawing No. E-22: Electrical Testing – Voice/Data/Fiber Test Results
Voice/Data/Fiber Record Drawings & Electrical O & M Manual (Revised)

■ REVIEWED □ COMMENTS NOTED

□ REJECTED □ REVISE AND RESUBMIT

□ RESUBMIT AS SPECIFIED □ RESUBMIT FOR RECORD ONLY

□ FOR INFORMATION ONLY/NOT REVIEWED

This review is only for general conformance with the design concept of the project and general compliance with the information given in the Contract Documents and does not include review of quantities, dimensions, weights or gauges, fabrication processes, sequence of work, construction methods, coordination with the work of other trades, or construction safety precautions all of which are the responsibility of the Contractor. Corrections or comments made on or attached to the shop drawings (or the absence of corrections and comments) during this review in no way relieves the Contractor from complying with the requirements of the Contract Drawings.

Engineer's Comments:

No comments.

Processed by: JFK Date: 05/19/05

Baltimore
849 Fairmount Avenue, Suite 102
Baltimore, Maryland 21286
410-832-2420 TEL
410-832-2418 FAX

Easton
8659 Commerce Drive, PO Box 1147
Easton, Maryland 21601
410-822-8688 TEL
410-822-8306 FAX

irca Lighting Protection Modules for 300-Pair Cable

Conduits

-Pair OSP Cable

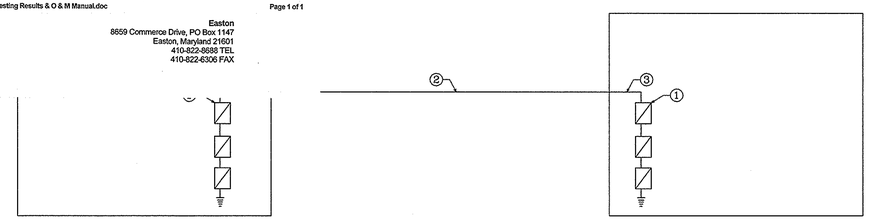

P.E Building
1st Floor IDF

S.T Building
Electrical Closet

Copper Interbuilding/Riser
Diagram ST. to P.E Building
College of Southern Maryland

NOTES:

① ST Building Fiber Optic Patch Panel for Single-mode(SMF) and (MMF)Multi-mode Fiber

② Two(2) 4" Conduits

③ One(1) 36-Strand 62.5(125 mm Multi-mode Fiber Optic Cable)
One(1) 12-Strand Single-mode Fiber Optic Cable

④ P.E Building Fiber Optic Patch Panel for 8-SMF and 24-MMF

⑤ 12-MMF Strands and 4 SMF Strands are Spliced to TC Building

⑥ Existing Fiber Optic Cable to TC Building

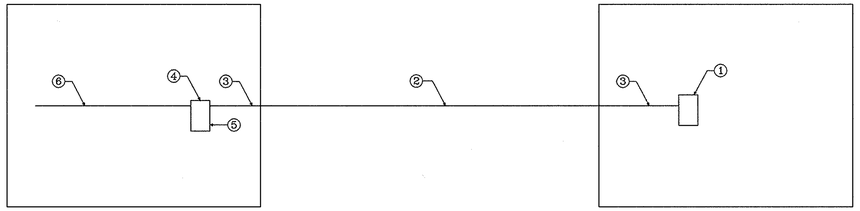

P.E Building
1st Floor MDF

S.T Building
Electrical Closet

Fiber Interbuilding/Riser
Diagram S.T to P.E Building
College of Southern Maryland

Firm Name and Address

FIBERPLUS
8240 PRESTON COURT, SUITE C
JESSUP, MD 20794
Tel: (301) 317-3300 Fax: (301) 317-8585
www.fiberplusinc.com

PROJECT TITLE

COLLEGE OF SOUTHERN MD

MARYLAND

Revisions			
NO.	DATE	Description
1		As-Builts
2		

Project	Network Wiring Plan	
Sales Engineer	Will Ruffin	
Sales Engineer's E-mail	Wruffin@fiberplusinc.com	
Sales Engineer's Extension	150	Sheet
Scale	NTS	N-1
Date	4/28/05	
DRAWN BY	D.Khup	

RECEIVED
MAY 10 2005
GIPE ASSOC.

PROJECT RECORD DRAWINGS

NOTES:

① 100-Pair Circa Lighting Protection Modules for 300-Pair Cable

② Two(2) 4" Conduits

③ One(1) 300-Pair OSP Cable

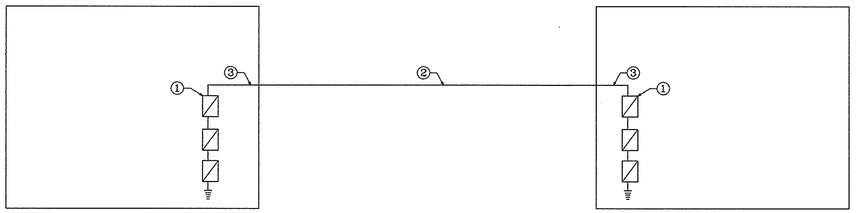

P.E Building
1st Floor IDF

S.T Building
Electrical Closet

Copper Interbuilding/Riser
Diagram ST. to P.E Building
College of Southern Maryland

NOTES:

① ST Building Fiber Optic Patch Panel for Single-mode(SMF) and (MMF)Multi-mode Fiber

② Two(2) 4" Conduits

③ One(1) 36-Strand 62.5(125 mm Multi-mode Fiber Optic Cable)
One(1) 12-Strand Single-mode Fiber Optic Cable

④ P.E Building Fiber Optic Patch Panel for 8-SMF and 24-MMF

⑤ 12-MMF Strands and 4 SMF Strands are Spliced to TC Building

⑥ Existing Fiber Optic Cable to TC Building

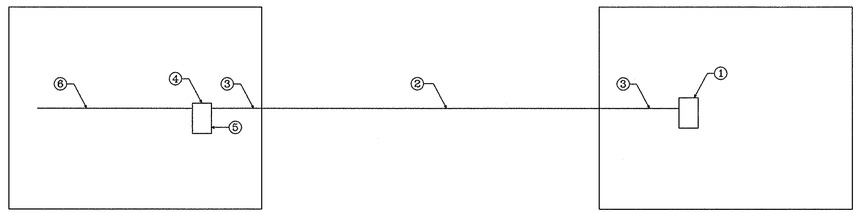

P.E Building
1st Floor MDF

S.T Building
Electrical Closet

Fiber Interbuilding/Riser
Diagram S.T to P.E Building
College of Southern Maryland

Firm Name and Address

FIBERPLUS
8240 PRESTON COURT, SUITE C
JESSUP, MD 20794
Tel: (301) 317-3300 Fax: (301) 317-8585
www.fiberplusinc.com

PROJECT TITLE

COLLEGE OF SOUTHERN MD

MARYLAND

Revisions			
NO.	DATE	Description	
1		As-Builts	
2			

Project	Network Wiring Plan
Sales Engineer	Will Ruffin
Sales Engineer's E-mail	Wruffin@fiberplusinc.com
Sales Engineer's Extension	150
Scale	NTS
Date	4/28/05
DRAWN BY	D.Khup
Sheet	N-1

PROJECT RECORD DRAWINGS

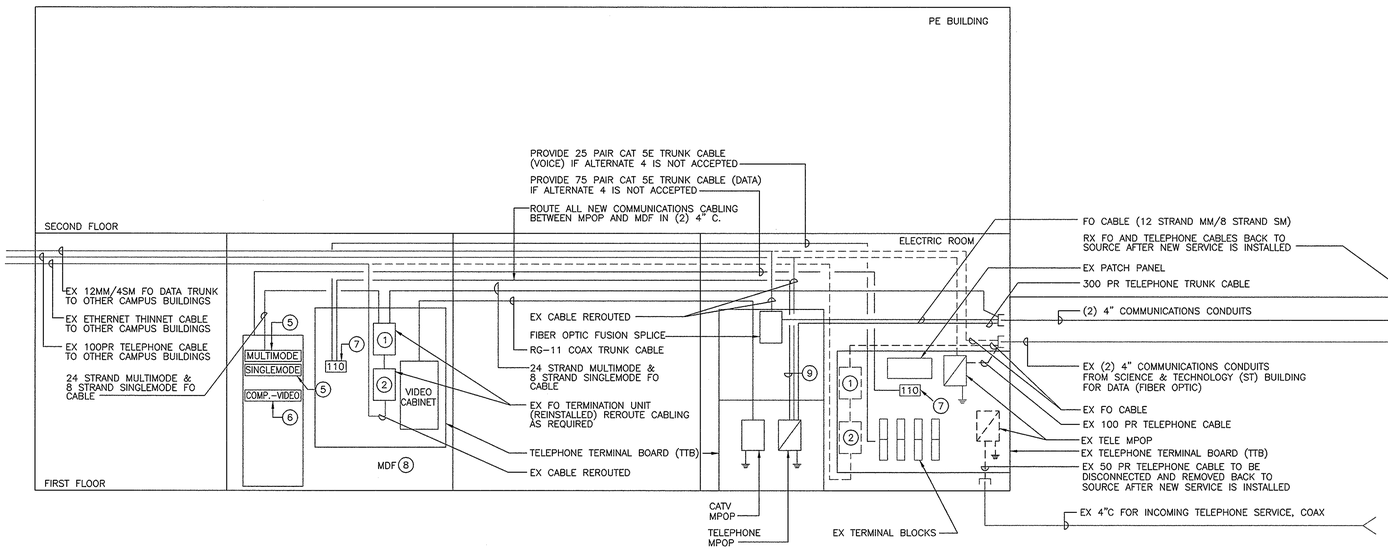

VOICE/DATA/VIDEO SYSTEM BACKBONE RISER DIAGRAM

SCALE: NONE

DRAWING NOTES:

1. EX 24 PORT FIBER OPTIC TERMINATION UNIT. RELOCATE TO NEW MDF.
2. EX FIBER OPTIC TERMINATION UNIT WITH ETHERNET TRANSCEIVER. RELOCATE TO NEW MDF
3. PROVIDE CATEGORY 5E VOICE BACKBONE CABLES. SIZE FOR 50% SPARE CAPACITY (PLUS 100 % OF ALL VOICE DROPS INDICATED). MINIMUM OF 150 PAIRS SHALL BE PROVIDED BETWEEN IDF & MDF.
4. PROVIDE 25 PAIR CATEGORY 5E DATA CABLES FOR COMPRESSED VIDEO SERVICE BETWEEN IDF AND MDF.
5. PROVIDE FIBER OPTIC TERMINATION ENCLOSURE.
6. PROVIDE CATEGORY 5E DATA PATCH PANEL.
7. PROVIDE 110 BLOCKS, QUANTITY AS REQUIRED.
8. REFER TO DETAILS FOR ADDITIONAL WIRING INFORMATION.
9. PROVIDE 200 PAIR CATEGORY 5E VOICE BACKBONE CABLES FROM MDF TO MPOP.

PROJECT RECORD DRAWINGS

College of Southern Maryland

Gipe Associates Inc.
Consulting Engineers
Baltimore, Maryland
Easton, Maryland
GAI WO# 01044

"THIS DRAWING AND THE DESIGN AND CONSTRUCTION FEATURES DISCLOSED ARE PROPRIETARY TO GIPE ASSOCIATES, INC. AND SHALL NOT BE ALTERED OR REUSED IN WHOLE OR IN PART WITHOUT THE EXPRESS WRITTEN PERMISSION OF GIPE ASSOCIATES, INC. Copyright © 2001"

Grimm and Parker Architects
1355 Beverly Rd.
Suite 105
McLean VA 22101
703.903.9100
703.903.9755 Fax

COLLEGE OF SOUTHERN MARYLAND WELLNESS CENTER
LA PLATA, MARYLAND

DATE	DESCRIPTION
12-12-03	CD SUBMITTAL
2-18-04	DGS SUBMISSION
4-11-04	BID SET
4-30-04	BID SET

Firm Name and Address
FIBERPLUS
8240 PRESTON COURT, SUITE C
JESSUP, MD 20794
Tel: (301) 317-3300 Fax: (301) 317-8585
www.fiberplusinc.com

Project Name and Address
COLLEGE OF SOUTHERN MARYLAND WELLNESS CENTER
LA PLATA
MARYLAND

Revisions

NO.	DATE	Description
1		
2		

Project	Network Wiring Plan
Sole Eginner	Will Ruffin
Sole Engineer's E-mail	Wruffin@fiberplusinc.com
Sole Engineer's Extension	150
Scale	NTS
Date	2/13/04
Drawn By	
Sheet	N-1

© GRIMM AND PARKER,P.C. 2001

DGS# - CC-09-MC99-3

GENERAL DRAWING NOTES

(APPLY TO THIS DRAWING ONLY)

1. EXISITING FIXTURES NOT INDICATED TO BE REMOVED SHALL REMAIN IN PLACE.
2. REMOVE PIPING SERVING PLUMBING CHASES TO POINT ABOVE CHASE. LEAVE STUB AT DROP INTO CHASE FOR FUTURE CONNECTION. EXCEPT WHERE INDICATED OTHERWISE, EXISTING HOT AND COLD WATER SANITARY AND VENT PIPING WITHIN CHASES SHALL REMAIN.

   EXCEPT WHERE INDICATED OTHERWISE, EXISTING COLD WATER, HOT WATER, SANITARY AND VENT PIPING WITHIN TOILET ROOM PLUMBING CHASES SHALL REMAIN.

DRAWING NOTES

(APPLY TO THIS DRAWING ONLY)

1. REMOVE EXISTING FIXTURE AND ALL ASSOCIATED PIPING AND APPURTENANCES TO POINT OF CONCEALMENT AND CAP.
2. REMOVE EXISTING FLOOR DRAIN. PLUG SANITARY BELOW SLAB.
3. REMOVE EXISTING TEMPERING VALVE ALONG WITH ALL SUPPLY PIPING.
4. REMOVE EXISTING HOT AND COLD WATER PIPE DOWN IN CHASE. LEAVE STUB ON COLD WATER AT END OF CHASE FOR FUTURE CONNECTION.
5. REMOVE EXISTING SHOWER CONTROL CONSOLE AND ASSOCIATED PIPING.
6. EXISTING 2"COLD WATER AND 3/4" HOT WATER UP TO CHASE ABOVE TO REMAIN. LEAVE STUBS BELOW SECOND FLOOR SLAB FOR FUTURE CONNECTION. REMOVE EXISTING PIPING FROM MAIN FOR EXTENT INDICATED. REMOVE EXISITING SUPPLY PIPING TO SHOWER.
7. REMOVE EXISTING END SUCTION FIRE PUMP IN PIT. EXISTING PIPING, VALVING AND APPURTENANCES SHALL REMAIN IN PLACE FOR CONNECTION TO NEW PUMP.
8. REMOVE EXISTING URINAL AND ALL ASSOCIATED SUPPORTS AND PIPING TO POINT OF CONCEALMENT AND CAP.
9. REMOVE EXISTING LAVATORY AND ALL ASSOCIATED PIPING AND APPURTENANCES TO POINT OF CONCEALMENT AND CAP.
10. REMOVE EXISTING WATER CLOSET AND ALL ASSOCIATED SUPPORTS, APPURTENANCES AND PIPING TO POINT OF CONCEALMENT AND CAP. PATCH SURFACES TO MATCH EXISTING.
11. RELOCATE EXISTING URINAL TO NEW MEN'S ROOM. REMOVE EXISTING SUPPORTS, APPURTENANCES AND PIPING TO POINT OF CONCEALMENT AND CAP. PATCH SURFACES TO MATCH EXISTING.
12. RELOCATE EXISTING LAVATORY. REMOVE EXISTING SUPPORTS, APPURTENANCES AND PIPING BACK TO WALL. LEAVE STUB AT WALL FOR FUTURE CONNECTIONS.
13. RELOCATE EXISTING WATER CLOSET. REMOVE EXISTING SUPPORTS, APPURTENANCES AND PIPING TO POINT OF CONCEALMENT AND CAP. PATCH SURFACES TO MATCH EXISTING.
14. REMOVE EXISTING TEMPERED WATER SERVICE PIPE TO TOP OF SHOWER ENCLOSURE. LEAVE STUB FOR CONNECTION UNDER NEW WORK.
15. REMOVE PORTION OF EXISTING 3" SANITARY BELOW SLAB. PLUG ONE END. LEAVE OTHER FOR CONNECTION UNDER NEW WORK.
16. EXISTING JANITOR SINK AND ASSOCIATED PIPING WITHIN WALL TO REMAIN. SANITARY AND VENT PIPING SHALL REMAIN IN TACT. REMOVE HOT WATER AND COLD WATER PIPING ABOVE WALL FOR EXTENT INDICATED.
17. REMOVE EXISTING WASHER DRAIN TO POINT OF CONCEALMENT AND PLUG.
18. REMOVE EXISTING TEMPERED WATER DOWN TO SHOWER ENCLOSURE.
19. EXISTING URINAL TO REMAIN.
20. REMOVE TRIM FROM EXISTING LAVATORY TO REMAIN.

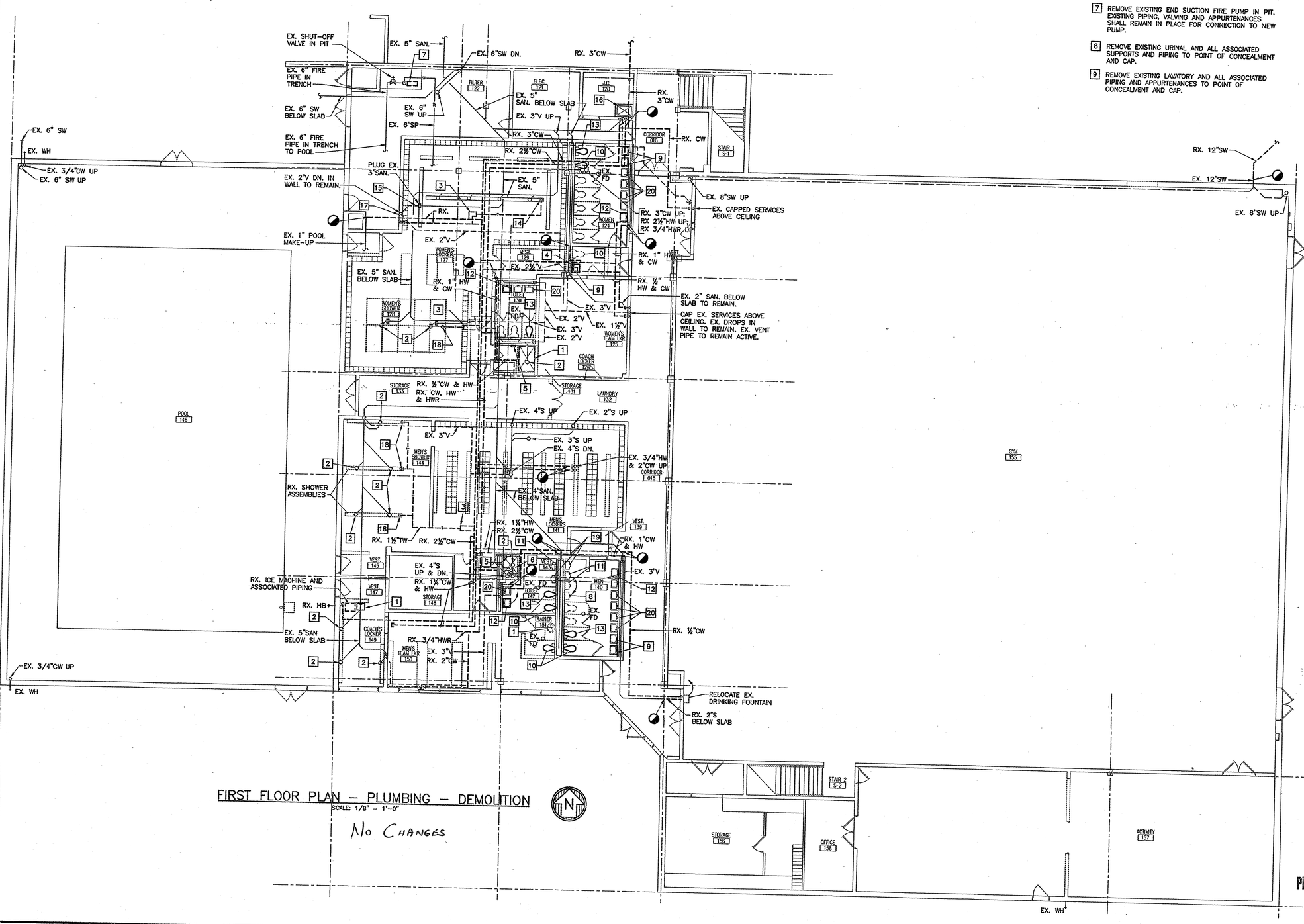

FIRST FLOOR PLAN – PLUMBING – DEMOLITION

SCALE: 1/8" = 1'-0"

No Changes

PROJECT RECORD DRAWINGS

SCALE: 1/8" = 1'-0"

RECEIVED JUN 17 2005

RECEIVED OCT 25 2004 GPE ASSOC.

College of Southern Maryland

Gipe Associates Inc. Consulting Engineers
Baltimore, Maryland
Easton, Maryland
GAI WO# 01044

"THIS DRAWING AND THE DESIGN AND CONSTRUCTION FEATURES DISCLOSED HEREIN ARE PROPRIETARY TO GIPE ASSOCIATES, INC. AND SHALL NOT BE USED, ALTERED OR REUSED IN WHOLE OR IN PART WITHOUT THE EXPRESS WRITTEN PERMISSION OF GIPE ASSOCIATES, INC. Copyright © 2001

Grimm and Parker Architects

1355 Beverly Rd.
Suite 105
McLean VA 22101
703.903.9100
703.903.9755 Fax

FIRST FLOOR PLAN – PLUMBING
DEMOLITION
COLLEGE OF SOUTHERN MARYLAND WELLNESS CENTER
LA PLATA, MARYLAND

DATE	DESCRIPTION
12-12-01	DD SUBMITTAL
2-8-02	DDS SUBMISSION
4-11-02	BID SET
4/30/05	Bid Set

© GRIMM AND PARKER,P.C. 2001

P1.1

P:\JOBS\2001\01044\plumbing\01044P1-1.dwg, 04/11/02 05:53:49 AM, jpg, 1:96

GENERAL DRAWING NOTES:
(APPLY TO THIS DRAWING ONLY)

1. EXCEPT WHERE INDICATED OTHERWISE, EXISTING COLD WATER, HOT WATER, SANITARY AND VENT PIPING WITHIN TOILET ROOM PLUMBING CHASES SHALL REMAIN.
2. EXCEPT WHERE INDICATED OTHERWISE, REMOVE EXISTING ROOF DRAINS. LEAVE PIPING INPLACE FOR RECONNECTION TO NEW DRAIN.

DRAWING NOTES:
(APPLY TO THIS DRAWING ONLY)

1. REMOVE EXISTING HOT WATER GENERATOR WITH ALL ASSOCIATED PIPING AND APPURTENANCES INCLUDING HEATING WATER PUMP AND HOT WATER RECIRCULATION PUMP.
2. REMOVE EXISTING 2½" COLD WATER, HOT WATER AND 3/4" HOT WATER RECIRCULATION PIPING DOWN.
3. REMOVE EXISTING URINAL AND ALL ASSOCIATED SUPPORTS AND PIPING TO POINT OF CONCEALMENT AND CAP.
4. REMOVE EXISTING LAVATORY AND ALL ASSOCIATED PIPING AND APPURTENANCES TO POINT OF CONCEALMENT AND CAP.
5. REMOVE EXISTING WATER CLOSET AND ALL ASSOCIATED SUPPORTS, APPURTENANCES AND PIPING TO POINT OF CONCEALMENT AND CAP. PATCH SURFACES TO MATCH EXISTING.
6. RELOCATE EXISTING URINAL TO NEW MEN'S ROOM. REMOVE EXISTING SUPPORTS, APPURTENANCES AND PIPING TO POINT OF CONCEALMENT AND CAP. PATCH SURFACES TO MATCH EXISTING.
7. RELOCATE EXISTING LAVATORY. REMOVE EXISTING SUPPORTS, APPURTENANCES AND PIPING TO POINT OF CONCEALMENT AND CAP. PATCH SURFACES TO MATCH EXISTING.
8. RELOCATE EXISTING WATER CLOSET. REMOVE EXISTING SUPPORTS, APPURTENANCES AND PIPING TO POINT OF CONCEALMENT AND CAP. PATCH SURFACES TO MATCH EXISTING.

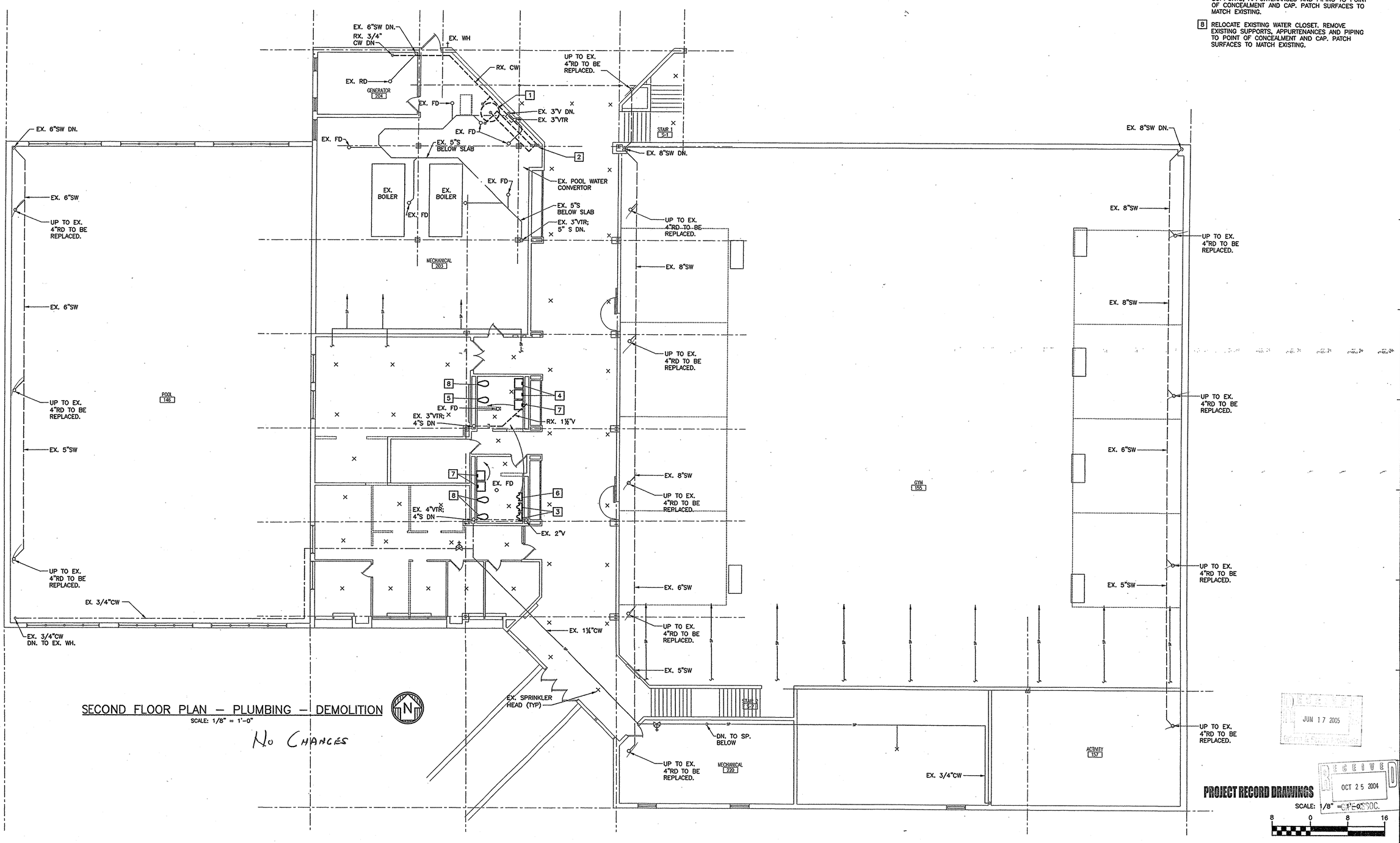

SECOND FLOOR PLAN – PLUMBING – DEMOLITION

SCALE: 1/8" = 1'-0"

No Changes

RECEIVED JUN 17 2005

RECEIVED OCT 25 2004

PROJECT RECORD DRAWINGS

SCALE: 1/8" = 1'-0"

8 0 8 16

College of Southern Maryland

Gipe Associates Inc.
Consulting Engineers
Baltimore, Maryland
Easton, Maryland
GAI WO# 01044

"THIS DRAWING AND THE DESIGN AND CONSTRUCTION FEATURES DISCLOSED ARE PROPRIETARY TO GIPE ASSOCIATES AND SHALL NOT BE ALTERED OR REUSED IN WHOLE OR IN PART WITHOUT THE EXPRESS WRITTEN PERMISSION OF GIPE ASSOCIATES, INC. Copyright © 2001

1355 Beverly Rd.
Suite 105
McLean VA 22101
703.903.9100
703.903.9755 Fax

Grimm and Parker Architects

SECOND FLOOR PLAN – PLUMBING
DEMOLITION
COLLEGE OF SOUTHERN MARYLAND WELLNESS CENTER
LA PLATA, MARYLAND

DATE	DESCRIPTION
12-12-01	DD SUBMITTAL
2-8-02	DGS SUBMISSION
4-11-02	BID SET
4/24/03	BID SET

© GRIMM AND PARKER, P.C. 2001

P1.2

DGS# - CC-09-MC

P:\JOBS\2001\01044\plumbing\01044P1.2.dwg, 04/11/02 09:53:02 AM, jpg, 1:96

DRAWING NOTES:

(APPLY TO THIS DRAWING ONLY)

1. ½" CW DOWN TO ICE MAKER. PROVIDE WATTS 7 SERIES BFP AND HALSEY TAYLOR MODEL 15242 IN-LINE FILTER IN HORIZONTAL PIPE.
2. CONNECT TO EXISTING STORM WATER AT WALL. TURN DOWN WITH ELBOW TO EXTEND DOWN TO INVERT ELEVATION 183.5±.
3. RELOCATE EXISTING LAVATORY TO ADULT ADA HEIGHT 34" AFF. PROVIDE NEW TRIM. EXTEND EXISTING SERVICES AS REQUIRED AND MAKE FINAL CONNECTIONS.
4. EX. LAVATORY TO REMAIN. PROVIDE NEW TRIM.
5. RELOCATE EXISTING URINAL AND ASSOCIATED TRIM PER ARCHITECTURAL DRAWINGS. EXTEND SERVICES AS REQUIRED AND MAKE FINAL CONNECTIONS.
6. RELOCATE EXISTING WATER CLOSET PER ARCHITECTURAL DRAWINGS. MOUNT AT ADULT ADA HEIGHT 17" AFF TO RIM. EXTEND EXISTING SERVICES WITHIN CHASE AS REQUIRED AND MAKE FINAL CONNECTIONS.
7. EXISTING WATER CLOSET TO REMAIN.
8. RELOCATE EXISITING URINAL. REMOUNT AT ADULT ADA HEIGHT 17" AFF TO RIM.
9. 4" OPEN HUB DRAIN. FINISH FLUSH WITH BOTTOM OF TROUGH.
10. RELOCATED LAVATORY FROM WOMEN'S TOILET ROOM. CONNECT TO EXISTING SERVICES IN CHASE. PROVIDE NEW TRIM.
11. 3/4"HB WITH VACUUM BREAKER ON CW & HW. MOUNT 36" ABOVE FLOOR.
12. EXISTING URINAL TO REMAIN.
13. 3" TEMPORARY CONNECTION FROM NEW 3" INCOMING SERVICE TO EXISTING 3" SERVICE THROUGH BUILDING. PROVIDE ¾" HOSE END DRAIN AT CONNECTION TO EXISTING FOR DRAIN DOWN INTO JANITOR SINK AT TIME OF DELETION OF EXISTING PIPING.

GENERAL DRAWING NOTES:

(APPLY TO THIS DRAWING ONLY)

1. REMOVE/RELOCATE EXISITNG SPRINKLER HEADS TO COORDINATE WITH NEW PARTITION LAYOUT. PROVIDE NEW HEADS AND PRIMARY AND SECONDARY PIPING AS REQUIRED TO SUIT NEW ROOMS.

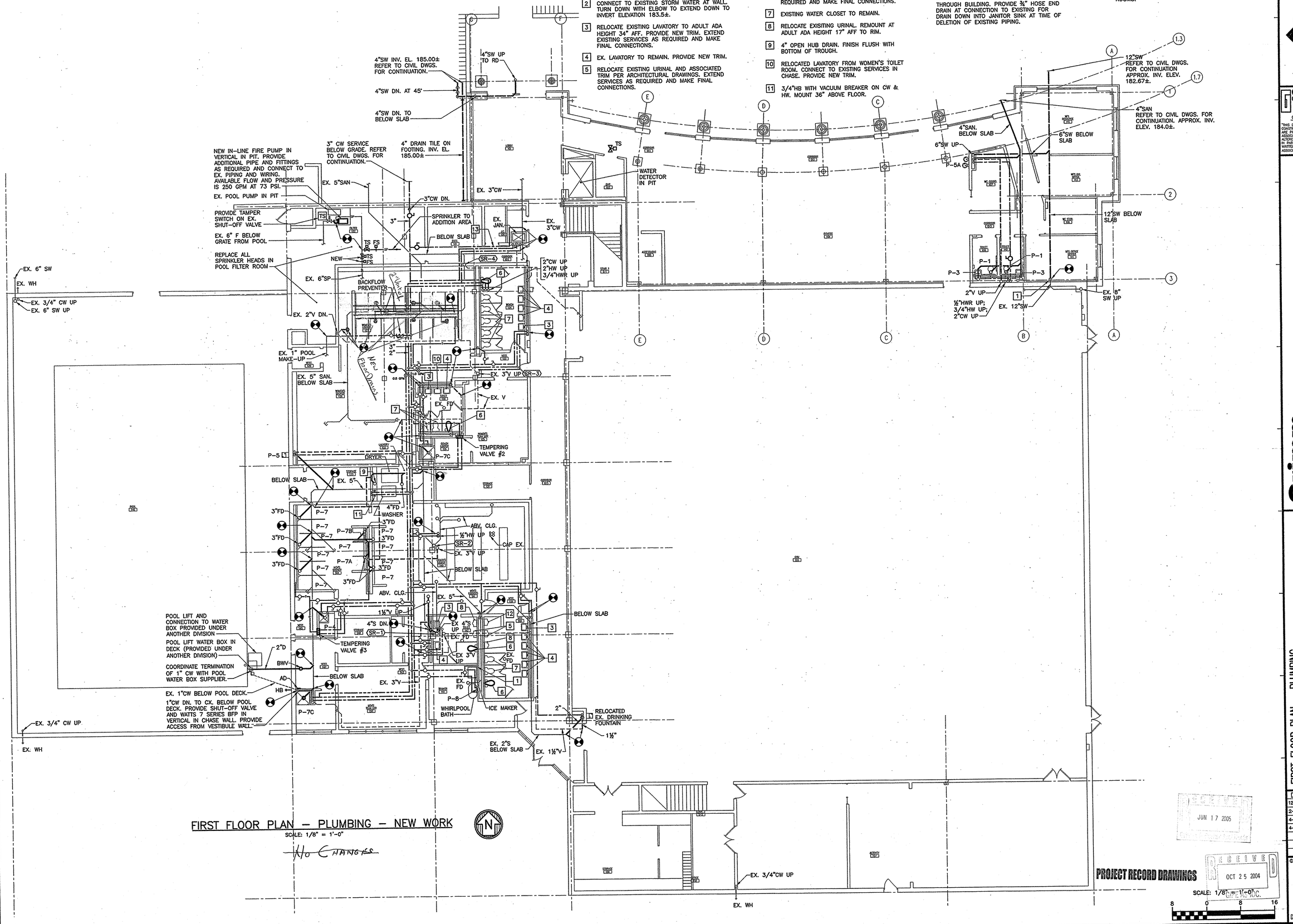

FIRST FLOOR PLAN – PLUMBING – NEW WORK

SCALE: 1/8" = 1'-0"

NO CHANGES

N

RECEIVED
JUN 17 2005

RECEIVED
OCT 25 2004

PROJECT RECORD DRAWINGS

SCALE: 1/8" = 1'-0" ORIG. P.C.

8 0 8 16

college of southern maryland

Gipe Associates Inc.
Consulting Engineers
Baltimore, Maryland
Easton, Maryland
GAI WO# 01044

"THIS DRAWING AND THE DESIGN AND CONSTRUCTION FEATURES DISCLOSED ARE PROPRIETARY TO GIPE ASSOCIATES, INC. AND SHALL NOT BE ALTERED OR REUSED IN WHOLE OR IN PART WITHOUT THE EXPRESS WRITTEN PERMISSION OF GIPE ASSOCIATES, INC. Copyright © 2001"

1355 Beverly Rd.
Suite 105
McLean VA 22101
703.903.9100
703.903.9755 Fax

Grimm and Parker Architects

FIRST FLOOR PLAN – PLUMBING
NEW WORK
COLLEGE OF SOUTHERN MARYLAND WELLNESS CENTER
LA PLATA, MARYLAND

DATE	DESCRIPTION
12-12-01	DD SUBMITTAL
2-8-02	DGS SUBMISSION
4-11-02	BID SET
4-30-03	BID SET

© GRIMM AND PARKER,P.C. 2001

P2.1

DGS# - CC-09-MC99-311

DRAWING NOTES:

(APPLY TO THIS DRAWING ONLY)

1. ½" CW DOWN TO ICE MAKER. PROVIDE WATTS 7 SERIES BFP AND HALSEY TAYLOR MODEL 15242 IN-LINE FILTER IN HORIZONTAL PIPE.
2. CONNECT TO EXISTING STORM WATER AT WALL. TURN DOWN WITH ELBOW TO EXTEND DOWN TO INVERT ELEVATION 183.5±.
3. RELOCATE EXISTING LAVATORY TO ADULT ADA HEIGHT 34" AFF. PROVIDE NEW TRIM. EXTEND EXISTING SERVICES AS REQUIRED AND MAKE FINAL CONNECTIONS.
4. EX. LAVATORY TO REMAIN. PROVIDE NEW TRIM.
5. RELOCATE EXISTING URINAL AND ASSOCIATED TRIM PER ARCHITECTURAL DRAWINGS. EXTEND SERVICES AS REQUIRED AND MAKE FINAL CONNECTIONS.
6. RELOCATE EXISTING WATER CLOSET PER ARCHITECTURAL DRAWINGS. MOUNT AT ADULT ADA HEIGHT 17" AFF TO RIM. EXTEND EXISTING SERVICES WITHIN CHASE AS REQUIRED AND MAKE FINAL CONNECTIONS.
7. EXISTING WATER CLOSET TO REMAIN.
8. RELOCATE EXISITING URINAL. REMOUNT AT ADULT ADA HEIGHT 17" AFF TO RIM.
9. 4" OPEN HUB DRAIN. FINISH FLUSH WITH BOTTOM OF TROUGH.
10. RELOCATED LAVATORY FROM WOMEN'S TOILET ROOM. CONNECT TO EXISTING SERVICES IN CHASE. PROVIDE NEW TRIM.
11. 3/4"HB WITH VACUUM BREAKER ON CW & HW. MOUNT 36" ABOVE FLOOR.
12. EXISTING URINAL TO REMAIN.
13. 3" TEMPORARY CONNECTION FROM NEW 3" INCOMING SERVICE TO EXISTING 3" SERVICE THROUGH BUILDING. PROVIDE ¾" HOSE END DRAIN AT CONNECTION TO EXISTING FOR DRAIN DOWN INTO JANITOR SINK AT TIME OF DELETION OF EXISTING PIPING.

GENERAL DRAWING NOTES:

(APPLY TO THIS DRAWING ONLY)

1. REMOVE/RELOCATE EXISITNG SPRINKLER HEADS TO COORDINATE WITH NEW PARTITION LAYOUT. PROVIDE NEW HEADS AND PRIMARY AND SECONDARY PIPING AS REQUIRED TO SUIT NEW ROOMS.

4"SW INV. EL. 185.00± REFER TO CIVIL DWGS. FOR CONTINUATION.
4"SW DN. AT 45°
4"SW DN. TO BELOW SLAB
4"SW UP TO RD
NEW IN-LINE FIRE PUMP IN VERTICAL IN PIT. PROVIDE ADDITIONAL PIPE AND FITTINGS AS REQUIRED AND CONNECT TO EX. PIPING AND WIRING. AVAILABLE FLOW AND PRESSURE IS 250 GPM AT 73 PSI.
EX. POOL PUMP IN PIT
PROVIDE TAMPER SWITCH ON EX. SHUT-OFF VALVE
EX. 6" F BELOW GRATE FROM POOL
REPLACE ALL SPRINKLER HEADS IN POOL FILTER ROOM
3" CW SERVICE BELOW GRADE. REFER TO CIVIL DWGS. FOR CONTINUATION.
4" DRAIN TILE ON FOOTING. INV. EL. 185.00±
EX. 5"SAN
3"CW DN.
EX. 3"CW
TS
WATER DETECTOR IN PIT
SPRINKLER TO ADDITION AREA
BELOW SLAB
EX. JAN.
EX. 3"CW
TS FS
OTS OFS
NEW
SR-4
2"CW UP
2"HW UP
3/4"HWR UP
EX. 6"SW
EX. WH
EX. 3/4" CW UP
EX. 6" SW UP
EX. 6"SW
BACKFLOW PREVENTER
EX. 3"FD
EX. 2"V DN.
P-7B
EX. 1" POOL MAKE-UP
EX. 5" SAN. BELOW SLAB
EX. 3"V UP
SR-3
EX. V
EX. FD
TEMPERING VALVE #2
P-7C
P-5
DRYER
BELOW SLAB
EX. 5"
4"FD
WASHER
P-7
P-7A
ABV. CLG.
½"HW UP
SR-2
CAP EX.
EX. 3"V UP
BELOW SLAB
1½"V UP
4"S DN.
SR
TEMPERING VALVE #3
POOL LIFT AND CONNECTION TO WATER BOX PROVIDED UNDER ANOTHER DIVISION
POOL LIFT WATER BOX IN DECK (PROVIDED UNDER ANOTHER DIVISION)
COORDINATE TERMINATION OF 1" CW WITH POOL WATER BOX SUPPLIER.
EX. 1"CW BELOW POOL DECK.
1"CW DN. TO CX. BELOW POOL DECK. PROVIDE SHUT-OFF VALVE AND WATTS 7 SERIES BFP IN VERTICAL IN CHASE WALL. PROVIDE ACCESS FROM VESTIBULE WALL.
2"D
BWV
AD
HB
EX. 3/4" CW UP
EX. WH
EX. 3"V
EX. 4"S
EX. 3"V UP
EX. FD
P-8
WHIRLPOOL BATH
ICE MAKER
2"
RELOCATED EX. DRINKING FOUNTAIN
1½"
EX. 2"S BELOW SLAB
EX. 1½"V
BELOW SLAB
4"SAN
12"SW REFER TO CIVIL DWGS. FOR CONTINUATION APPROX. INV. ELEV. 182.67±.
4"SAN REFER TO CIVIL DWGS. FOR CONTINUATION. APPROX. INV. ELEV. 184.0±.
4"SAN. BELOW SLAB
6"SW UP
P-5A
6"SW BELOW SLAB
12"SW BELOW SLAB
P-1
P-3
2"V UP
½"HWR UP; 3/4"HW UP; 2"CW UP
EX. 12"SW
EX. 8" SW UP
EX. 3/4"CW UP
EX. WH

FIRST FLOOR PLAN – PLUMBING – NEW WORK

SCALE: 1/8" = 1'-0"

PROJECT RECORD DRAWINGS

SCALE: 1/8" = 1'-0"

8 0 8 16

RECEIVED JUN 17 2005

RECEIVED OCT 25 2004 GIPE ASSOC.

College of Southern Maryland
Gipe Associates Inc.
Consulting Engineers
Baltimore, Maryland
Easton, Maryland
GAI WO# 01044

"THIS DRAWING AND THE DESIGN AND CONSTRUCTION FEATURES DISCLOSED ARE PROPRIETARY TO GIPE ASSOCIATES, INC. AND SHALL NOT BE ALTERED OR REUSED IN WHOLE OR IN PART WITHOUT THE EXPRESS WRITTEN PERMISSION OF GIPE ASSOCIATES, INC. Copyright © 2001"

1355 Beverly Rd.
Suite 105
McLean VA 22101
703.903.9100
703.903.9755 Fax

Grimm and Parker Architects

FIRST FLOOR PLAN – PLUMBING
NEW WORK
COLLEGE OF SOUTHERN MARYLAND WELLNESS CENTER
LA PLATA, MARYLAND

DATE	DESCRIPTION
12-12-01	DD SUBMITTAL
2-8-02	DGS SUBMISSION
4-11-02	BID SET
4-30-03	BID SET

© GRIMM AND PARKER,P.C. 2001

P2.1

DGS# - CC-09-MC99

DRAWING NOTES:

(APPLY TO THIS DRAWING ONLY)

1. RELOCATED EXISTING URINAL. EXTEND EXISTING PIPING WITHIN CHASE AND MAKE FINAL CONNECTION. MOUNT AT ADA COMPLIANT HEIGHT 17"AFF TO RIM.
2. RELOCATED EXISTING LAVATORY. EXTEND EXISTING PIPING AND MAKE FINAL CONNECTIONS. PRIVIDE NEW TRIM. MOUNT FIXTURE AT STANDARD ADULT HEIGHT.
3. RELOCATED EXISTING WATER CLOSET. EXTEND EXISTING PIPING WITHIN CHASE AND MAKE FINAL CONNECTIONS. MOUNT FIXTURE AT STANDARD ADULT HEIGHT.
4. RELOCATED EXISTING LAVATORY. EXTEND EXISTING PIPING WITHIN CHASE AND MAKE FINAL CONNECTIONS. PROVIDE NEW TRIM. MOUNT FIXTURE AT ADULT ADA COMPLIANT HEIGHT 34" AFF TO RIM.
5. RELOCATED EXISTING WATER CLOSET. EXTEND EXISTING PIPING WITHIN CHASE AND MAKE FINAL CONNECTIONS. MOUNT FIXTURE AT ADULT ADA COMPLIANT HEIGHT 17" AFF TO RIM.
6. CONNECT TO OVERFLOW SCUPPER. REFER TO ARCHITECTURAL DRAWINGS FOR EXACT LOCATION AND DETAILS.

GENERAL DRAWING NOTES

(APPLY TO THIS DRAWING ONLY)

1. REMOVE/RELOCATE EXISITNG SPRINKLER HEADS TO COORDINATE WITH NEW PARTITION LAYOUT. PROVIDE NEW HEADS AND PIPING AS REQUIRED TO SUIT NEW ROOMS.

SECOND FLOOR PLAN – PLUMBING – NEW WORK

SCALE: 1/8" = 1'-0"

PROJECT RECORD DRAWINGS

SCALE: 1/8" = 1'-0"

College of Southern Maryland

Gipe Associates Inc.
Consulting Engineers
Baltimore, Maryland
Easton, Maryland
GAI WO# 01044

"THIS DRAWING AND THE DESIGN AND CONSTRUCTION FEATURES DISCLOSED ARE PROPRIETARY TO GIPE ASSOCIATES, INC. AND SHALL NOT BE ALTERED OR REUSED IN WHOLE OR IN PART WITHOUT THE EXPRESS WRITTEN PERMISSION OF GIPE ASSOCIATES, INC. Copyright © 2001"

1355 Beverly Rd.
Suite 105
McLean VA 22101
703.903.9100
703.903.9755 Fax

Grimm and Parker Architects

SECOND FLOOR PLAN – PLUMBING – NEW WORK
COLLEGE OF SOUTHERN MARYLAND WELLNESS CENTER
LA PLATA, MARYLAND

DATE	DESCRIPTION
12-12-01	DD SUBMITTAL
2-8-02	DGS SUBMISSION
4-11-02	BID SET
4/26/02	BID SET

© GRIMM AND PARKER,P.C. 2001

P2.2

DGS# - CC-09-MC99-311

RECEIVED JUN 17 2005

RECEIVED OCT 25 2004 BRCA/SOC.

S:\2001\01044\plumbing\01044P2.2.dwg, 04/11/02 10:23:21 AM, jbp, 1:96

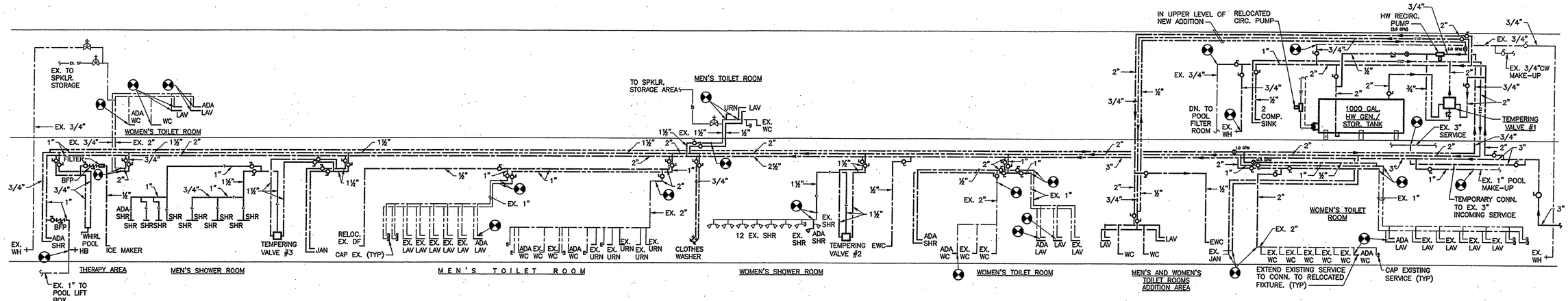

DOMESTIC WATER FLOW DIAGRAM

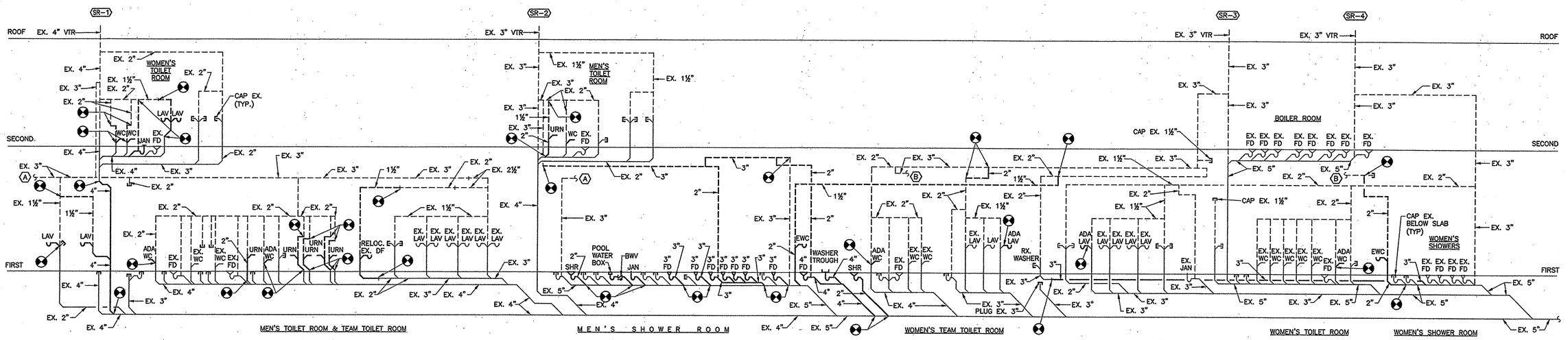

SANITARY AND VENT FLOW DIAGRAM

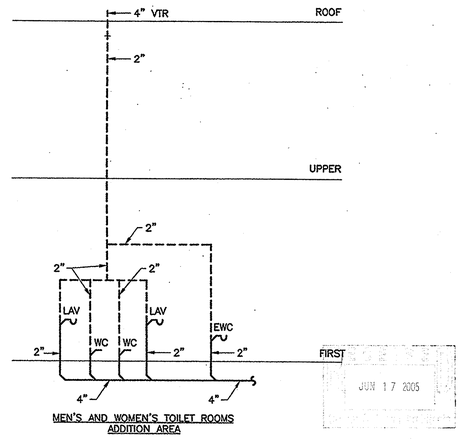

JUN 17 2005

PROJECT RECORD DRAWINGS

SANITARY AND VENT FLOW DIAGRAM

RECEIVED
OCT 25 2004

Gipe Associates, Inc.
Consulting Engineers
Baltimore, Maryland
Easton, Maryland
GAI WO# 01C

THIS DRAWING AND THE DESIGN AND CONSTRUCTION FEATURES INCORPORATED ARE PROPRIETARY TO GIPE ASSOCIATES, INC. AND SHALL NOT BE ALTERED OR REUSED IN WHOLE OR IN PART WITHOUT THE EXPRESS WRITTEN PERMISSION OF GIPE ASSOCIATES, INC. Copyright

1355 Beverly Rd.
Suite 105
McLean VA 22101
703.903.9100

Grimm and Parker

College of Southern Maryland

FLOW DIAGRAMS - NEW WORK

COLLEGE OF SOUTHERN MARYLAND WELLNESS CENTER

DATE	DESCRIPTION
12-12-01	DD SUBMIT
2-8-02	DGS SUBMIS
4-11-02	BID SET
4-30-03	BID SET

© GRIMM AND PARKER, P.C.

P6.1

DGS# - CC-09-MC99

1 IN-LINE HOT WATER RECIRCULATION PUMP DETAIL

SCALE: NONE

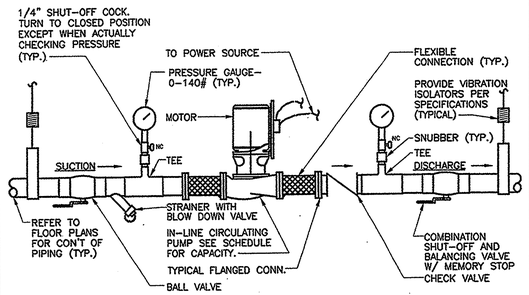

2 FLOOR CLEANOUT DETAIL

SCALE: NONE

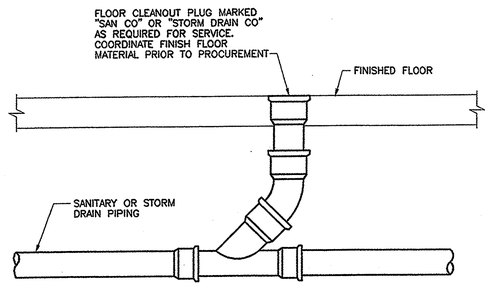

3 CLOTHES WASHER VALVE/DRAIN BOX INSTALLATION DETAIL

SCALE: NONE

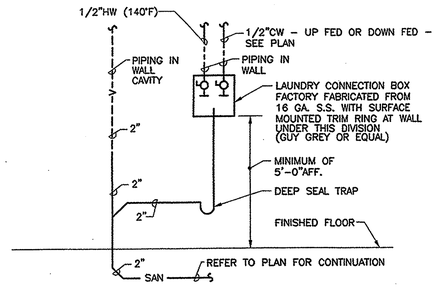

4 TRAP PRIMING STATION DETAIL

SCALE: NONE

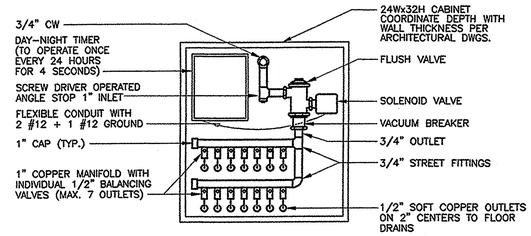

DETAIL NOTES:

TOTAL NUMBER OF OUTLETS SHALL BE DETERMINED BY THE NUMBER OF FLOOR DRAINS PRIMED WITHIN THE IMMEDIATE AREA. LOCATIONS SHALL BE IN JANITORS CLOSETS OR AS SHOWN ON PLAN. REFER TO RISER DIAGRAM FOR INDIVIDUAL TRAP PRIMERS.

5 TYPICAL SLEEVE THRU FLOOR DETAIL

SCALE: NONE

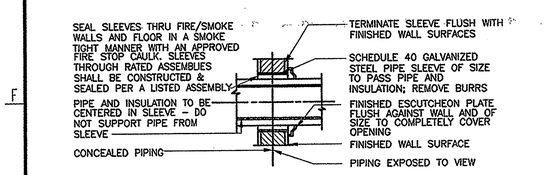

6 TYPICAL PIPE SLEEVE THRU EXTERIOR WALL ABOVE GRADE DETAIL

SCALE: NONE

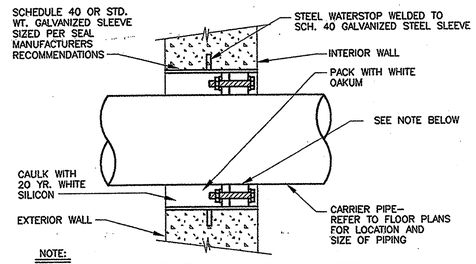

NOTE:

SEAL ASSEMBLY SHALL BE MODULAR MECHANICAL TYPE CONSISTING OF INTERLOCKING RUBBER LINKS SHAPED TO CONTINUOUSLY FILL THE ANNULAR SPACE BETWEEN THE CARRIER PIPING AND THE SLEEVE. BOLTS SHALL BE STAINLESS STEEL WITH DELRIN PLASTIC PRESSURE PLATES.

7 TYPICAL SANITARY VENT THRU ROOF DETAIL

SCALE: NONE

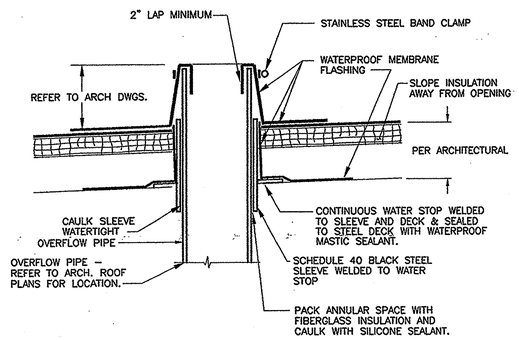

8 DETAIL-PIPE THRU EXTERIOR WALL PENETRATION SEAL BELOW GRADE

SCALE: NONE

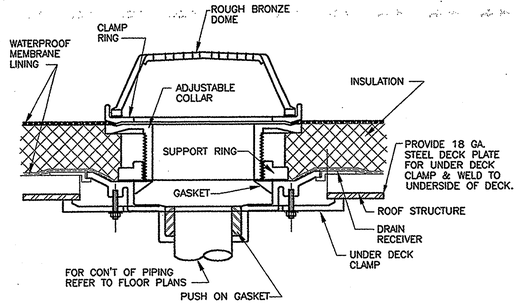

9 TYPICAL PIPE SLEEVE THRU INTERNAL WALL DETAIL

SCALE: NONE

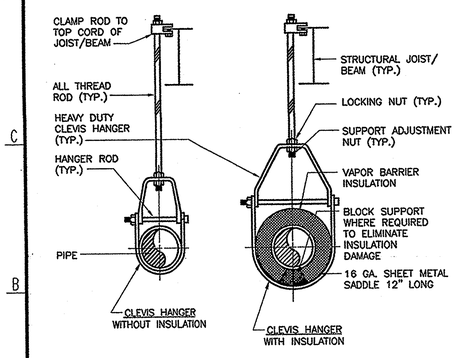

10 TYPICAL WATERTIGHT SLEEVE THRU EXTERIOR WALL DETAIL

SCALE: NONE

11 STORM WATER OVERFLOW PIPE THRU ROOF DETAIL

SCALE: NONE

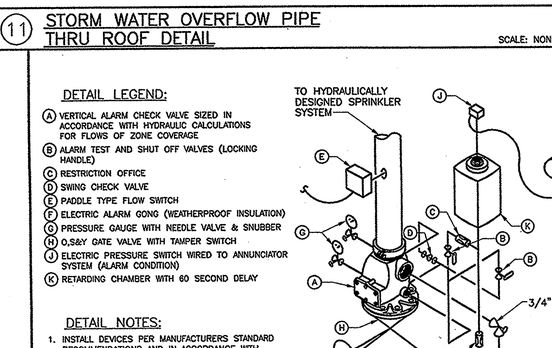

12 ROOF DRAIN DETAIL

SCALE: NONE

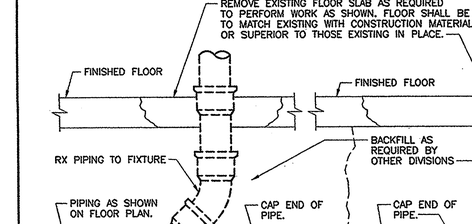

13 TYPICAL PIPE SUPPORT DETAIL

SCALE: NONE

14 HIGH-LOW TEMPERING VALVE #1 DETAIL

SCALE: NONE

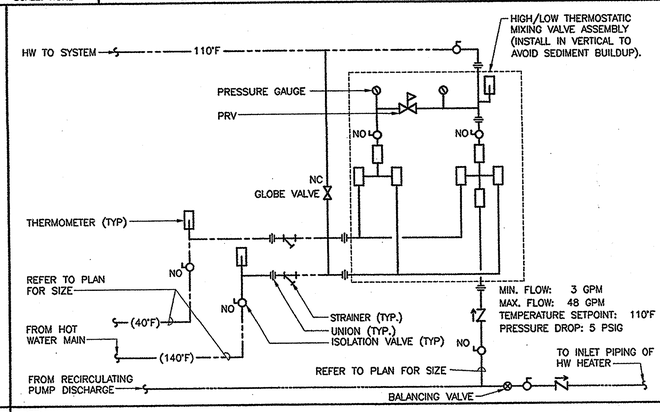

15 SPRINKLER ALARM VALVE ASSEMBLY DETAIL

SCALE: NONE

DETAIL LEGEND:

- (A) VERTICAL ALARM CHECK VALVE SIZED IN ACCORDANCE WITH HYDRAULIC CALCULATIONS FOR FLOWS OF ZONE COVERAGE
- (B) ALARM TEST AND SHUT OFF VALVES (LOCKING HANDLE)
- (C) RESTRICTION OFFICE
- (D) SWING CHECK VALVE
- (E) PADDLE TYPE FLOW SWITCH
- (F) ELECTRIC ALARM GONG (WEATHERPROOF INSULATION)
- (G) PRESSURE GAUGE WITH NEEDLE VALVE & SNUBBER
- (H) O,S&Y GATE VALVE WITH TAMPER SWITCH
- (J) ELECTRIC PRESSURE SWITCH WIRED TO ANNUNCIATOR SYSTEM (ALARM CONDITION)
- (K) RETARDING CHAMBER WITH 60 SECOND DELAY

DETAIL NOTES:

1. INSTALL DEVICES PER MANUFACTURERS STANDARD RECOMMENDATIONS AND IN ACCORDANCE WITH APPLICABLE NFPA STANDARDS.
2. COORDINATE WITH DIVISION 16000 AND BUILDING EMS.
3. PROVIDE FOR EACH ZONE (MAX 52,000 SQ FT COVERAGE)

16 TYPICAL UNDERSLAB PIPING DEMOLITION AND ABANDONMENT DETAIL

SCALE: NONE

RECEIVED
OCT 25 2004

PROJECT RECORD DRAWINGS

College of Southern Maryland

Gipe Associates Inc.
Consulting Engineers
Baltimore, Maryland
Easton, Maryland
GAI WO# 01044

"THIS DRAWING AND THE DESIGN AND CONSTRUCTION FEATURES DISCLOSED ARE PROPRIETARY TO GIPE ASSOCIATES, INC. AND SHALL NOT BE ALTERED OR REUSED IN WHOLE OR IN PART WITHOUT THE EXPRESS WRITTEN PERMISSION OF GIPE ASSOCIATES, INC. Copyright © 2001"

Grimm and Parker Architects

1355 Beverly Rd.
Suite 105
McLean VA 22101
703.903.9100
703.903.9755 Fax

DETAILS

COLLEGE OF SOUTHERN MARYLAND WELLNESS CENTER
LA PLATA, MARYLAND

DATE	DESCRIPTION
12-12-01	DD SUBMITTAL
2-8-02	DGS SUBMISSION
4-11-02	BID SET
4/29/03	BID SET

© GRIMM AND PARKER P.C. 2001

P7.1

DGS# - CC-09-MC99-311

P:\JOBS\2001\01044\plumbing\01044P7.1.dwg, 04/11/02 09:48:17 AM, jhp, 1:88

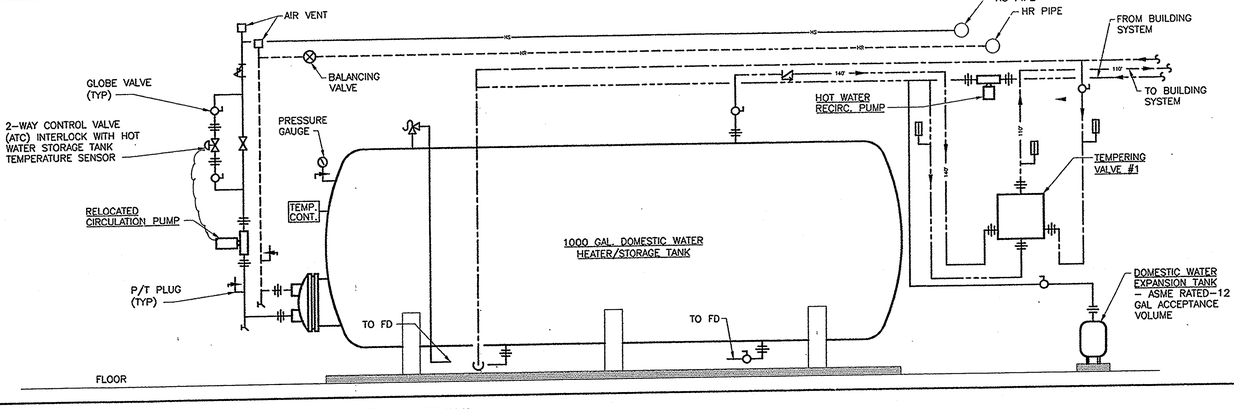

(17) DOMESTIC HOT WATER GENERATOR/STORAGE TANK PIPING DETAIL

SCALE: NONE

college of southern maryland

Gipe Associates Inc.
Consulting Engineers
Baltimore, Maryland
Easton, Maryland
GAI WO# 01044

"THIS DRAWING AND THE DESIGN AND CONSTRUCTION FEATURES DISCLOSED ARE PROPRIETARY TO GIPE ASSOCIATES, INC. AND SHALL NOT BE USED IN WHOLE OR IN PART OR ALTERED WITHOUT THE EXPRESS WRITTEN PERMISSION OF GIPE ASSOCIATES, INC. Copyright © 2001"

1355 Beverly Rd.
Suite 105
McLean VA 22101
703.903.9100
703.903.9755 Fax

Grimm + Parker Architects

DETAILS

COLLEGE OF SOUTHERN MARYLAND WELLNESS CENTER
LA PLATA, MARYLAND

DATE	DESCRIPTION
12-12-01	DD SUBMITTAL
2-8-02	DGS SUBMISSION
4-11-02	BID SET
1/30/03	BID SET

© GRIMM AND PARKER P.C. 200

P7.2

DGS# - CC-09-MC99-3

RECEIVED
JUN 17 2003

RECEIVED
OCT 25 2004
GIPE ASSOC.

PROJECT RECORD DRAWINGS

P:\JOBS\2001\01044\plumbing\01044P7.2.dwg, 04/11/02 08:48:16 AM, Jeg, 1:88

GENERAL NOTES: (PLUMBING)

A. COORDINATE NEW WORK BETWEEN ALL DISCIPLINES.

B. REFER TO SECTIONS ON ARCHITECTURAL AND MECHANICAL DRAWINGS FOR PIPE ROUTING THROUGH THE FACILITY.

C. COORDINATE FLOOR DRAIN LOCATIONS WITH MECHANICAL EQUIPMENT PLACEMENT PRIOR TO SETTING FLOOR DRAINS. DRAINS SHALL BE LOCATED AS CLOSE TO EQUIPMENT DRAIN POINTS AS POSSIBLE.

D. CONDENSATE FROM AIR HANDLING UNIT COILS SHALL BE PIPED TO THE STORM DRAIN SYSTEM PIPING.

E. COORDINATE PLUMBING PIPING ENCLOSURES WITH ARCHITECTURAL DRAWINGS PRIOR TO SETTING PIPING BELOW SLABS.

F. FIELD VERIFY PIPING MATERIALS AND SIZES PRIOR TO CONNECTION THERETO.

G. PROVIDE SHUTOFF VALVES IN DOMESTIC WATER SYSTEM BRANCH LINES SERVING TWO OR MORE FIXTURES.

H. INSTALL PIPING SO VALVES ARE ACCESSIBLE.

I. WHERE HOT AND COLD WATER PIPING DROPS INTO PIPE CHASE, THE SIZE SHOWN FOR THE PIPE DROPS SHALL BE USED TO THE LAST FIXTURE.

J. ITEMS SUCH AS ACCESS DOORS, RISE AND DROPS IN PIPING, ETC., ARE INDICATED ON THE DRAWINGS FOR CLARITY OR A SPECIFIC LOCATION REQUIREMENT AND SHALL NOT BE INTERPRETED AS THE EXTENT OF THE REQUIREMENTS FOR THESE ITEMS. THE CONTRACTOR IS RESPONSIBLE FOR THESE ITEMS AS REQUIRED ELSEWHERE IN THE CONTRACT DOCUMENTS.

EQUIPMENT CAPACITIES: (PLUMBING)

DOMESTIC WATER HEATER #1 – 140° DELIVERY TEMPERATURE

DOUBLE WALL COPPER TUBE TANK HEATER MODEL ~~DW12-60, 104 SQ. FT AREA OF HEATING SURFACE;~~
BOILER WATER: EWT 190° LWT 170° 44 GPM PD 3.8 FT.
TANK WATER: EWT 40° LWT 140°
RECOVERY RATE: 22 GPM

APPROVED MANUFACTURERS: A.O. SMITH, PATTERSON KELLY

DOMESTIC WATER HEATER STORAGE TANK

48" DIA. x 137"H
1000 GALLON, GLASS LINED, HORIZONTAL STEEL
BASED ON MODEL HD48-1000 BY A.O. SMITH

FIRE PUMP

CLOSE COUPLED, END SUCTION, VERTICAL DISCHARGE PUMP,
150 FT. TDH, 500 GPM, 1760 RPM, 25 HP
TACO MODEL 3013

RECIRCULATION PUMPS

PUMP #1 110° HOT WATER RECIRCULATION:
1/3 HP, 115V-60HZ-1PH
1725 RPM
2.5 GPM AT 17.58 FT. HEAD
BASED ON TACO MODEL 112 IN-LINE CIRCULATOR

TEMPERING VALVES

TEMPERING VALVE #1
(BUILDING MAIN SYSTEM)
SYSTEM: HIGH/LOW 140°F TO 110°F
HIGH: 48 GPM
LOW: 3 GPM
PRESS. DROP: 5 PSI
BASED ON LEONARD MODEL TM-186-12520-PRV.

TEMPERING VALVE #2 & #3
(SHOWER TEMPERING VALVE)
SYSTEM: HIGH/LOW 110°F TO 95°F
HIGH: 26 GPM
LOW: 2.5 GPM
PRESS. DROP: 5 PSI
BASED ON LEONARD MODEL TM-186-8015-PRV.

PUMP SCHEDULE

SERVICE	GPM	FT. OF HEAD	HP	RPM	ELECT. CHAR. V/ø/Hz	TYPE	REMARKS (BASED ON)
FIRE PUMP	250	175	20	3500	460V/3ø/60HZ	VERTICAL IN-LINE	PEERLESS PUMP MODEL 3PVF8

PLUMBING LEGEND

SYMBOL	ABBREVIATION	DESCRIPTION
— — —	CW	COLD WATER
— — —	HW	HOT WATER(110°)
— — —	HWR	HOT WATER RETURN(110°)
—140—	140°	140° DOMESTIC HOT WATER
—140R—	140°R	140° DOMESTIC HOT WATER
—F—	"F"	FIRE LINE
—SP—	SP	SPRINKLER LINE
	EX	EXISTING
—PD—	PD	PUMPED DISCHARGE
—G—	G	LP GAS
		DUPLEX GAS OUTLET
—SAN—	SAN	SANITARY
—V—	V	VENT
SR-X		SANITARY/VENT RISER DESIGNATION
—SD—	SD	STORM DRAIN
—IW—	IW	INDIRECT WASTE
—FD—	FD	FOUNDATION DRAIN
		BALL VALVE
	FCO	FLOOR CLEANOUT
	WCO	WALL CLEANOUT
	CO	CLEANOUT
	UP	PIPE UP
	UP&DN	PIPE UP & DN
	DN	PIPE DN (SHOWN PLAN/ELEVATION)
		SIGHT GLASS
		FLOAT VALVE
	PH	PIPE HANGER
	FD	FLOOR DRAIN WITH TRAP PRIMER
	AD	AREA DRAIN
(P)	RD	ROOF DRAIN (WITH SQUARE FOOTAGE INDICATED)
	DST	DEEP SEAL TRAP (SHOWN PLAN/ELEVATION)
	VTR	VENT THROUGH ROOF (SHOWN PLAN/ELEVATION)
		BUTTERFLY VALVE
		GATE VALVE
		GLOBE VALVE
		MIXING VALVE
(P)	PRV	PRESSURE REDUCING VALVE (PRESSURE INDICATED)
		CHECK VALVE
	DDC	DOUBLE DETECTOR CHECK VALVE
	BFP	BACKFLOW PREVENTER
		METER (FLUID OR GAS)
"	IN	INCHES
'	FT	FEET
	WH	WALL HYDRANT
	NFWH	NON-FREEZE WALL HYDRANT
	HED	HOSE END DRAIN
OTS	O,S&Y	OUTSIDE STEM & YOKE VALVE W/TAMPER SWITCH
OTS	NRS	NON-RISING STEM & YOKE WITH TAMPER SWITCH
FS	FS	FLOW SWITCH
TS	TS	TAMPER SWITCH
	FDV	FIRE DEPT HOSE CONNECTION
FCVA FS	FCVA	FLOOR CONTROL VALVE ASSEMBLY
		"Y" STRAINER
	WHA	WATER HAMMER ARRESTOR
	AP	ACCESS PANEL
		POINT OF CONNECTION TO SITE UTILITIES
	HB	HOSE BIBB
— AW —	AW	ACID RESISTANT WASTE
— AV —	AV	ACID RESISTANT VENT
--PSC--	PSC	PUMPED STEAM CONDENSATE
		SQUARE FOOTAGE
PS	PS	PRESSURE SWITCH

SYMBOL	ABBREVIATION	DESCRIPTION
	LOC	LIMIT OF CONTRACT
		ECCENTRIC REDUCER
		CONCENTRIC REDUCER
		FLEXIBLE CONNECTION
	CAP	CAPPED PIPE
	BF	BLIND FLANGE
	VB	VACUUM BREAKER
	MAV	MANUAL AIR VENT
	AAV	AUTOMATIC AIR VENT
		BALANCING VALVE
	BDV	BLOW DOWN VALVE (W/HOSE END/DRAIN VALVE)
		UNION
		PRESSURE/TEMPERATURE RELIEF VALVE
	CX	CONNECT TO EXISTING
Δ P		PRESSURE DIFFERENCE
Δ T		TEMPERATURE DIFFERENCE
	INV ELEV	INVERT ELEVATION
	℄	CENTER LINE
		THERMOMETER
		PRESSURE GAUGE WITH NEEDLE VALVE & SNUBBER
Ø	DIA	DIAMETER (OR ELECTRICAL PHASE)
	BWV	BACK WATER VALVE WITH ACCESS COVER
		PIPING BELOW GRADE OR SLAB
		SOLENOID VALVE (HIGH TEMP SHUTOFF VALVE)
		SLOPE OF PIPE (WITH % OF SLOPE SHOWN)
		DIRECTION OF FLOW
	FC	FUNNEL CONNECTION @ FLOOR DRAIN
	AFF	ABOVE FINISHED FLOOR
	ABV	ABOVE
	ANC	ANCHOR
	AQ	AQUASTAT
	APPROX	APPROXIMATE
	BHP	BRAKE HORSEPOWER
	BOP	BOTTOM OF PIPE
	BTU	BRITISH THERMAL UNIT
	BTUH	BRITISH THERMAL UNIT PER HOUR
	BOTT	BOTTOM
	CONN	CONNECT
	CU FT	CUBIC FEET
	CAP	CAPACITY
	CLG	CEILING
	CONC	CONCRETE
	DWG	DRAWING
	DN	DOWN
	DISH	DISCHARGE
	ELEC	ELECTRIC
	EWT	ENTERING WATER TEMPERATURE
	STD	STANDARD
	CI	CAST IRON
	SCH	SCHEDULE
	HYD	HYDRAULIC
	ELEV	ELEVATION
	GPM	GALLONS PER MINUTE
	GA	GAUGE
	GALV	GALVANIZED
	FT.HD	FEET OF HEAD
	–	PIPING BELOW SLAB
	HOR	HORIZONTAL
	HP	HORSEPOWER
	HTR	HEATER

NOTE: NOT ALL SYMBOLS AND ABBREVIATIONS MAY BE USED.

PLUMBING FIXTURE SCHEDULE

DESIG.	FIXTURE	ROUGH-IN CONNECTION C.W.	H.W.	SAN.	VENT	FIXTURE UNIT VALUES C.W.	H.W.	SAN.	REMARKS
P-1	WATER CLOSET (WH)	1"	----	4"	2"	10	----	6	ADULT ADA ACCESSIBLE
P-2	NOT USED	----	----	----	----	----	----	----	
P-3	LAVATORY (WH)	1/2"	1/2"	1 1/2"	1 1/2"	1.5	1.5	2	ADULT ADA ACCESSIBLE
P-4	MOP SINK	3/4"	3/4"	3"	1 1/2"	2.25	2.25		
P-5	ELECTRIC WATER COOLER	1/2"	--	1 1/2"	1 1/2"	.25	----	1/2	ADULT ADA ACCESSIBLE
P-6	2 COMPARTMENT SINK	1/2"	1/2"	2"	2"	1.5	1.5	2	ADA ACCESSIBLE
P-7	SHOWER	–	1/2"	2"	--	1	1	2	ADULT; 2 SIDED; SINGLE TEMPERATURE WATER SUPPLY
P-7A	SHOWER	–	1/2"	2"	--	1	1	2	ADULT; 1 SIDED; SINGLE TEMPERATURE WATER SUPPLY
P-7B	SHOWER	–	1/2"	2"	--	1	1	2	ADULT; 2 SIDED W/ ADA; SINGLE TEMP. WATER SUPPLY
P-7C	SHOWER STALL	1/2"	1/2"	2"	1 1/2"	1	1	2	ADULT ADA ACCESSIBLE
P-8	THERAPY STATION	1/2"	1/2"	--	--	1.5	1.5	--	

WH DESIGNATES WALL HUNG UNIT.

RECEIVED JUN 17 2005 DIRECTOR OF PLANNING

RECEIVED OCT 25 2004 SIDE ASSOC

PROJECT RECORD DRAWINGS

College of Southern Maryland
Gipe Associates Inc.
Consulting Engineers
Baltimore, Maryland
Easton, Maryland
GAI WO# 01044

"THIS DRAWING AND THE DESIGN AND CONSTRUCTION FEATURES DISCLOSED HEREIN ARE PROPRIETARY TO GIPE ASSOCIATES, INC. AND SHALL NOT BE ALTERED OR REUSED IN WHOLE OR IN PART WITHOUT THE EXPRESS WRITTEN PERMISSION OF GIPE ASSOCIATES, INC. Copyright © 200

1355 Beverly Rd.
Suite 105
McLean VA 22101
703.903.9100
703.903.9755 Fax

Grimm and Parker Architects

GENERAL NOTES; EQUIPMENT CAPACITIES; SCHEDULES AND LEGEND
COLLEGE OF SOUTHERN MARYLAND WELLNESS CENTER
LA PLATA, MARYLAND

DATE	DESCRIPTION
12-12-01	DD SUBMITTAL
2-8-02	DDS SUBMISSION
4-11-02	BID SET
4/30/03	BID SET

© GRIMM AND PARKER P.C. 200

P9.1

DGS# - CC-09-MC99-31

P:\JOBS\2001\01044\plumbing\01044P9.1.dwg, 04/11/02 09:47:36 AM, jlog, 1:96

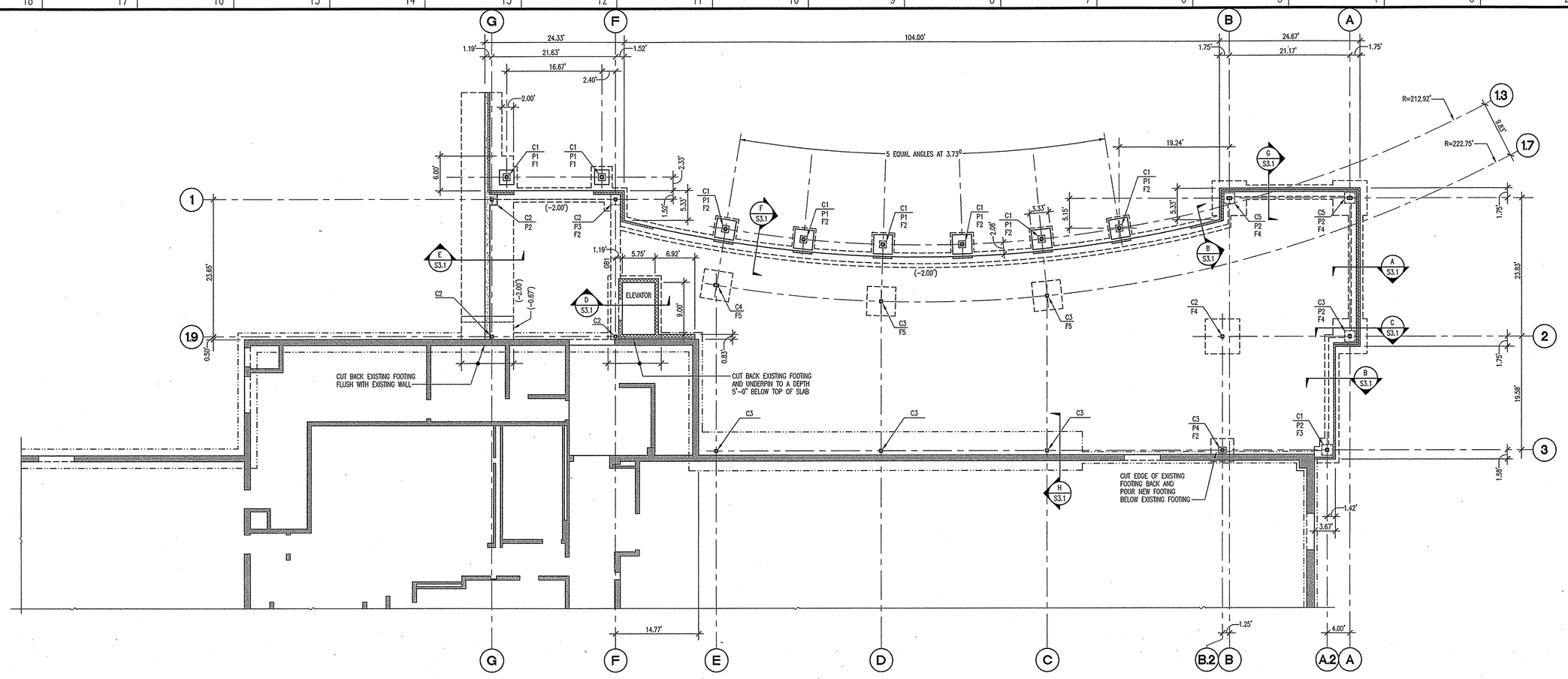

FOUNDATION AND SLAB ON GRADE PLAN

SCALE: 1/8"=1'-0"

FOUNDATION NOTES:

1.) SLAB ON GRADE SHALL BE 5" THICK NORMAL WEIGHT CONCRETE (f'c=3000 PSI) REINFORCED WITH 6"x6", W1.4 x W1.4 W.W.F. ON 10 MIL VAPOR BARRIER OVER 4" WASHED GRAVEL. TOP OF CONCRETE SLAB ELEVATION SHALL BE 0'-0" (DATUM).

2.) TOP OF INTERIOR FOOTING ELEVATION SHALL BE 8" BELOW TOP OF SLAB UNLESS NOTED OTHERWISE THUS: (.....). TOP OF EXTERIOR FOOTING ELEVATION SHALL BE 2'-0" BELOW TOP OF CONCRETE SLAB ELEVATION UNLESS NOTED OTHERWISE THUS: (.....). FOOTING ELEVATIONS ARE FOR BID PURPOSES ONLY AND MAY HAVE TO BE FIELD ADJUSTED. LOWER FOOTINGS AS REQUIRED BELOW UTILITY LINES.

3.) TOP OF PER ELEVATION SHALL BE 8" BELOW TOP OF CONCRETE SLAB ELEVATION UNLESS NOTED OTHERWISE THUS: [.....].

COLUMN SCHEDULE

MARK	SIZE	BASE PLATE	REMARKS
C1	TS 5"x5"x5/16"	11"x11"x3/4"	
C2	TS 8"x8"x1/2"	14"x14"x1"	
C3	TS 7"x7"x3/8"	12"x14"x1"	
C4	TS 8"x6"x1/2"	14"x14"x1"	
C5	TS 10"x8"x1/2"	16"x16"x1 1/4"	(4) 1"DIA. A307 ANCHOR BOLTS WITH 4"x4"x3/8"PLATE WASHERS AND NUT EMBEDDED IN CONCRETE

CONCRETE PIER SCHEDULE

MARK	SIZE	REINFORCEMENT
P1	14"x14"	4-#6 VERTICAL AND #3 TIE AT 8"o.c.
P2	22"x22"	8-#7 VERTICAL AND #4 TIE AT 8"o.c.
P3	20"x22"	8-#7 VERTICAL AND #4 TIE AT 8"o.c.
P4	12"x16"	4-#6 VERTICAL AND #3 TIE AT 8"o.c.

FOOTING SCHEDULE

MARK	SIZE	THICK	REINFORCEMENT
F1	3'-8"x3'-8"	1'-0"	5-#4 EACH WAY BOTTOM
F2	4'-0"x4'-0"	1'-0"	5-#4 EACH WAY BOTTOM
F3	2'-8"x4'-0"	1'-0"	5-#4 SHORT BOTTOM AND 3-#4 LONG BOTTOM
F4	6'-0"x6'-0"	1'-2"	8-#5 EACH WAY BOTTOM
F5	5'-0"x5'-0"	1'-0"	6-#5 EACH WAY BOTTOM

CONCRETE GRADE BEAM SCHEDULE

MARK	WIDTH	DEPTH	REINFORCEMENT	REMARKS
GB1	20"	16"	4-#6 TOP AND BOTTOM AND #4 TIE AT 8"o.c.	STEP BOTTOM DOWN TO ELEVATOR FOOTING

PROJECT RECORD DRAWINGS

College of Southern Maryland

1355 Beverly Rd.
Suite 105
McLean VA 22101
703.903.9100
703.903.9755 Fax

Grimm and Parker Architects

Columbia Engineering Inc.
Structural Engineers
6270-A Dobbin Road
Columbia, Maryland 21045
301.621.4015 Work Telephone
410.992.9970 Balto. Telephone
410.992.0627 Fax
ENGCEI@AOL.COM E-mail

FOUNDATION AND SLAB ON GRADE PLAN
COLLEGE OF SOUTHERN MARYLAND WELLNESS CENTER
LA PLATA, MARYLAND

DATE	DESCRIPTION
12/13/01	DESIGN AND DEVELOPMENT
2/8/02	DGS SUBMISSION
4/11/02	BID SET
4/30/03	BID SET

RECEIVED OCT 2 2004

S-1.1

CEI# 21250

SECOND FLOOR FRAMING NOTES:

1.) SECOND FLOOR SLAB SHALL BE 2 1/2" NORMAL WEIGHT CONCRETE (f'c=3000 PSI) REINFORCED WITH 6"x6", W1.4 x W1.4 W.W.F. OVER 1 1/2", 20 GA., PAINTED COMPOSITE METAL DECK BY USD INC., OR EQUIVALENT (3 SPAN MINIMUM).

2.) [No.] DENOTES NUMBER OF 3/4"DIAMETER x 3"LONG HEADED STUDS WELDED TO STEEL BEAM/GIRDER. SPACE UNIFORMLY ALONG LENGTH UNLESS NOTED OTHERWISE.

3.) △ DENOTES AMOUNT OF CAMBER REQUIRED.

4.) TOP OF SECOND FLOOR SLAB ELEVATION SHALL BE 13'-4" ABOVE FIRST FLOOR ELEVATION. TOP OF STEEL ELEVATION SHALL BE 4" BELOW TOP OF SLAB ELEVATION UNLESS NOTED OTHERWISE THUS: (.....).

5.) BEAM TO COLUMN CONNECTIONS SHALL BE MADE WITH A SHEAR PLATE.

6.) MECHANICAL PIPING SHALL BE SUPPORTED FROM STRUCTURAL STEEL FRAMING ONLY.

7.) ←— DENOTES BEAM TO COLUMN OR BEAM TO BEAM MOMENT CONNECTION, SEE PLAN FOR CAPACITY.

8.) ⟵ DENOTES SPAN OF METAL ROOF DECK, SEE ROOF FRAMING PLAN NOTES FOR DESCRIPTION.

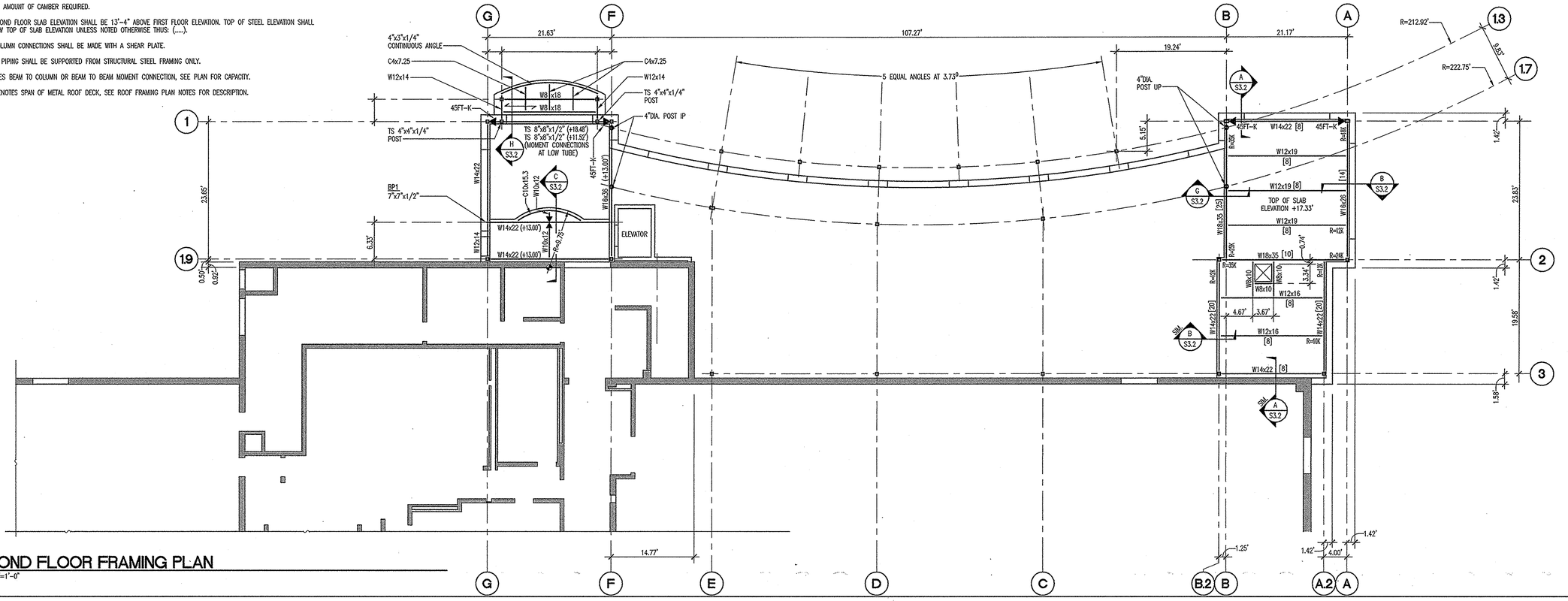

SECOND FLOOR FRAMING PLAN

SCALE: 1/8"=1'-0"

ROOF FRAMING NOTES:

1.) ROOF DECK SHALL BE 1 1/2", 20 GA., TYPE 'B' GALVANIZED ROOF DECK BY USD INC., OR EQUIVALENT (2 SPAN MINIMUM). ATTACH TO STEEL WITH 5/8"DIAMETER PUDDLE WELDS AND ATTACH SIDELAPS TOGETHER WITH No.10 SCREWS.

2.) TOP OF STEEL ELEVATION NOTED THUS: (....) ON PLAN IS MEASURED FROM TOP OF SLAB ON GRADE ELEVATION.

3.) FRAME OPENINGS IN DECK LARGER THAN 1'-0"x1'-0" WITH 4"x3"x1/4"ANGLE (LLV) ALL AROUND.

4.) ←— DENOTES BEAM TO COLUMN MOMENT CONNECTION, SEE PLAN FOR CAPACITY.

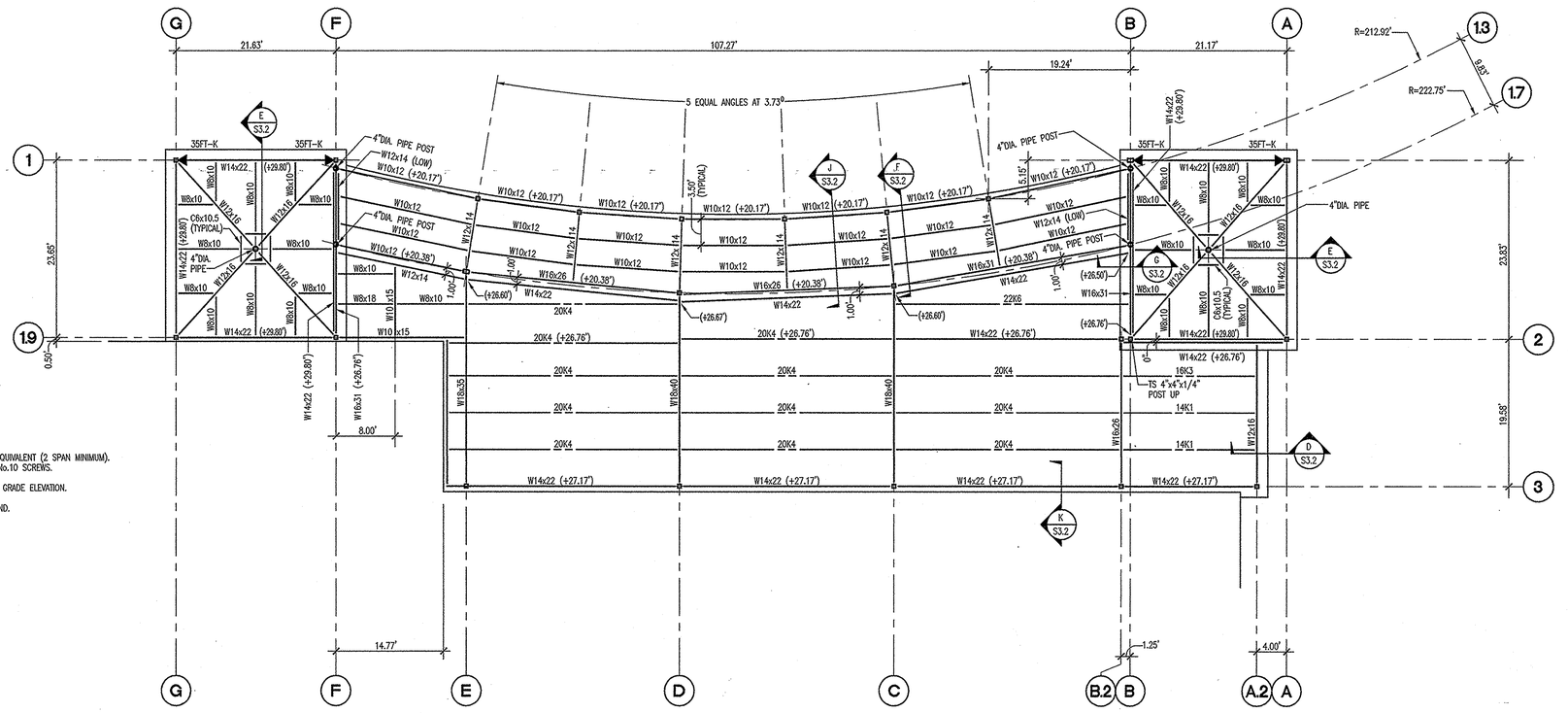

ROOF FRAMING PLAN

SCALE: 1/8"=1'-0"

PROJECT RECORD DRAWINGS

RECEIVED OCT 25 2004

college of southern maryland
CSM
1355 Beverly Rd.
Suite 105
Mclean VA 22101
703.903.9100
703.903.9735 Fax

Grimm and Parker Architects

Columbia Engineering Inc.
Structural Engineers
8470-C Veterans Highway
Columbia, Maryland 21045
301.621-4015 Wash.Telephone
410.992.9870 Balto.Telephone
410.992.9877 Fax
ENGGEIB@AOL.COM E-mail

SECOND FLOOR AND ROOF FRAMING PLANS
COLLEGE OF SOUTHERN MARYLAND WELLNESS CENTER
LA PLATA, MARYLAND

DATE	DESCRIPTION
12/13/01	DESIGN AND DEVELOPMENT
2/8/02	DCS SUBMISSION
4/11/02	BID SET
4/30/03	Bid Set

S-1.2

CE# 21250

GENERAL NOTES

FOUNDATION AND SLAB-ON-GRADE:

1.) FOOTINGS ARE DESIGNED FOR AN ASSUMED BEARING CAPACITY OF 3000 PSF. FOOTINGS SHALL BEAR ON NATURAL UNDISTURBED SOIL, 1'-0" BELOW ORIGINAL GRADE OR ON STRUCTURALLY COMPACTED FILL AND BOTTOM OF EXTERIOR FOOTINGS SHALL BE 2'-6" BELOW FINISHED GRADE. CONTRACTOR SHALL VERIFY SOIL PRESSURE IN THE FIELD. IF FOUND TO BE LESS THAN 3000 PSF, THE FOOTINGS WILL HAVE TO BE REDESIGNED.

2.) ALL FILL UNDER SLABS-ON-GRADE SHALL BE COARSE GRANULAR MATERIAL COMPACTED TO 95% OF MAXIMUM DENSITY AT OPTIMUM WATER CONTENT. SLABS-ON-GRADE SHALL BE STRIP POURED IN ACCORDANCE WITH ACI 302.1R "GUIDE FOR CONCRETE FLOOR AND SLAB CONSTRUCTION" (LATEST LOCAL APPROVED EDITION). SAW CUT CONTROL JOINTS SUCH THAT TOTAL AREA BOUNDED BY SAW CUTS AND FORMED EDGES DOES NOT EXCEED 650 SQUARE FOOT.

3.) DO NOT BACK FILL AGAINST WALLS UNTIL SUPPORTING SLABS ARE IN PLACE AND HAVE ATTAINED REQUIRED STRENGTH.

CONCRETE:

1.) ALL CONCRETE, EXCEPT AS NOTED, SHALL BE f'c=3000 psi NORMAL WEIGHT CONCRETE AT 28 DAYS. ALL CONCRETE EXPOSED TO THE WEATHER SHALL BE f'c=4500 psi NORMAL WEIGHT CONCRETE AND SHALL BE AIR ENTRAINED PER ACI 318 "BUILDING CODE REQUIREMENTS FOR STRUCTURAL CONCRETE" (LATEST LOCAL APPROVED EDITION) FOR SEVERE EXPOSURE.

2.) ALL REINFORCING SHALL BE DEFORMED BILLET STEEL CONFORMING TO ASTM DESIGNATION A615 (LATEST LOCAL APPROVED EDITION), GRADE 60. ALL REINFORCING SHALL BE DETAILED, FABRICATED AND PLACED IN ACCORDANCE WITH ACI 315, "MANUAL OF STANDARD PRACTICE FOR DETAILING CONCRETE STRUCTURES" (LATEST LOCAL APPROVED EDITION).

3.) ALL SPLICES IN REINFORCING SHALL BE CLASS "B" SPLICES IN ACCORDANCE WITH ACI 318, "BUILDING CODE REQUIREMENTS FOR STRUCTURAL CONCRETE" (LATEST LOCAL APPROVED EDITION) EXCEPT AS NOTED ON PLANS.

4.) WELDED WIRE FABRIC (W.W.F.) SHALL HAVE ENDS LAPPED ONE FULL MESH.

5.) WALL FOOTING REINFORCING SHALL EXTEND 2'-0" INTO ADJACENT COLUMN FOOTING, UNLESS NOTED OTHERWISE.

6.) BEND HORIZONTAL WALL REINFORCING 1'-0" MINIMUM AROUND ALL CORNERS OR PROVIDE 4'-0" LONG CORNER BARS TO MATCH HORIZONTAL REINFORCING.

7.) UNLESS OTHERWISE NOTED ON STRUCTURAL DRAWINGS, PROVIDE CONCRETE PROTECTION FOR REINFORCING AS FOLLOWS:

CAST AGAINST EARTH	3"
EXPOSED TO EARTH OR WEATHER:	
No. 6 AND LARGER BARS	2"
No. 5 AND SMALLER BARS	1 1/2"
NOT EXPOSED TO EARTH OR WEATHER:	
SLABS, WALLS AND JOIST	3/4"
BEAMS GIRDERS AND COLUMNS	1 1/2"TO TIES, STIRRUPS OR SPIRALS

8.) CONSTRUCTION JOINTS IN WALLS, BEAMS AND SLABS SHALL BE LOCATED MIDWAY BETWEEN SUPPORTS EXCEPT THAT WHERE AN INTERSECTING MEMBER OCCURS AT MID-SPAN, THE JOINT SHALL BE OFFSET TWICE THE WIDTH OF THE INTERSECTING MEMBER. BEFORE FRESH CONCRETE IS POURED AGAINST CONCRETE IN PLACE, THE CONTACT SURFACES OF CONCRETE IN PLACE SHALL BE THOROUGHLY CLEANED, ALL LAITANCE SHALL BE REMOVED AND THE CONTACT SURFACES SHALL BE THOROUGHLY SLUSHED WITH GROUT CONSISTING OF ONE PART SAND TO ONE PART CEMENT WITH A MINIMUM AMOUNT OF WATER.

9.) CONTRACTOR MUST SUBMIT A CONCRETE DESIGN MIX IN ACCORDANCE WITH ACI-318 (LATEST LOCAL APPROVED EDITION). SUCH DESIGN MIX SHALL BE ACCOMPANIED BY THE APPROPRIATE GRAPHS AND BACKGROUND DATA. CONCRETE DESIGN MIX SHALL INDICATE 7 AND 28 DAY STRENGTHS, CEMENT CONTENT AND WATER-CEMENT RATIO, FINE AND COARSE AGGREGATES AND ADMIXTURES FOR EACH DESIGN STRENGTH. THE ADDITION OF WATER AT THE PLANT OR IN THE FIELD GREATER THAN THE SPECIFIED WATER CONTENT IS STRICTLY PROHIBITED.

10.) ALL CONCRETE WORK SHALL CONFORM TO THE LATEST LOCAL APPROVED EDITIONS OF THE FOLLOWING ACI AND ASTM DOCUMENTS:

ACI-301	SPECIFICATIONS FOR STRUCTURAL CONCRETE
ACI-318	CODE
ACI-214	COMPRESSIVE TEST
ACI-306	COLD WEATHER
ACI-315	DETAILING
ACI-347	FORMWORK
ACI-305	HOT WEATHER
ACI-211	PROPORTIONS OF CONCRETE
ACI-304	PLACING CONCRETE
ASTM C-94	READY-MIX CONCRETE

11.) ALL FIELD AND LAB TESTING OF CONCRETE SHALL CONFORM TO THE LATEST LOCAL APPROVED EDITIONS OF ASTM:

ASTM C-31	FIELD CYLINDER SPECIMENS
ASTM C-143	SLUMP TEST
ASTM C-231	AIR CONTENT (WHEN REQUIRED)
ASTM C-39	LAB TESTING CYLINDERS
ASTM C-172	SAMPLING FRESH CONCRETE
ASTM C-42	HARDENED CORES (WHEN REQUIRED)

TEST RESULTS SHALL BE SIGNED AND SEALED BY PROFESSIONAL ENGINEER REGISTERED IN THE LOCAL JURISDICTION.

12.) ALL FORMWORK SHALL BE IN ACCORDANCE WITH ACI 347, "GUIDE TO FORMWORK FOR CONCRETE", (LATEST LOCAL APPROVED EDITION).

MASONRY:

1.) CONCRETE MASONRY SHALL CONFORM TO THE LATEST EDITION OF ASTM SPECIFICATION C90. CONCRETE MASONRY TO BE USED SHALL BE SAMPLED AND TESTED BY THE MASONRY SUPPLIER ACCORDING TO ASTM C140. ALL CONCRETE MASONRY CONSTRUCTION SHALL CONFORM ACI 530/ASCE 5, "BUILDING CODE REQUIREMENTS FOR MASONRY STRUCTURES", (LATEST LOCAL APPROVED EDITION) AND ACI 530.1/ASCE 6, "SPECIFICATIONS FOR MASONRY STRUCTURES", (LATEST LOCAL APPROVED EDITION).

UNLESS OTHERWISE NOTED, CONCRETE MASONRY UNITS SHALL HAVE A MINIMUM COMPRESSIVE STRENGTH OF 1900 psi ON THE NET AREA. ALL BRICK SHALL HAVE A MINIMUM COMPRESSIVE STRENGTH OF 4400 psi ON THE NET AREA.

ALL MORTAR SHALL CONFORM TO ASTM C270. MORTAR TO BE USED SHALL BE SAMPLED AND TESTED BY THE BRICK AND MASONRY SUPPLIERS ACCORDING TO ASTM C780 AND RESULTS SUBMITTED TO THE ENGINEER FOR APPROVAL. MORTAR SHALL BE PORTLAND CEMENT/LIME MORTAR TYPE "S" AS A MINIMUM.

2.) LOOSE LINTELS FOR MASONRY WALLS SHALL BE AS FOLLOWS FOR EACH 4" WIDTH:

0'-0" TO 3'-0"	3 1/2"x3 1/2"x5/16" ANGLE
3'-1" TO 5'-0"	4"x3 1/2"x5/16" ANGLE
5'-1" TO 6'-0"	5"x3 1/2"x3/8" ANGLE
6'-1" TO 8'-0"	6"x3 1/2"x3/8" ANGLE

ALL ANGLES SHALL HAVE THEIR SHORT LEG OUTSTANDING AND 6"MINIMUM BEARING. LINTELS OVER OPENINGS IN INTERIOR NON-BEARING MASONRY PARTITIONS NOT OTHERWISE SPECIFIED SHALL BE PRECAST LIGHTWEIGHT CONCRETE LINTELS WITH 1-#5 BAR TOP AND BOTTOM FOR EACH 4"WIDTH.

3.) ALL SOLID CMU SHALL BE 100% SOLID BLOCK OR HOLLOW BLOCK WITH CELLS FILLED 100% SOLID WITH f'c=3000 psi PEA GRAVEL CONCRETE. CONCRETE SHALL BE PLACED IN POUR HEIGHTS NOT TO EXCEED 4'-0" AS CMU CONSTRUCTION PROGRESSES.

4.) UNLESS OTHERWISE NOTED PROVIDE ANCHORAGE OF MASONRY WALLS TO THE STRUCTURE IN THE FOLLOWING MANNER:

AT STEEL BEAMS	HECKMANN TOP FLANGE ANCHOR OR EQUIVALENT AT
AT STEEL COLUMNS	ADJUSTABLE MASONRY ANCHORS AT
AT CONCRETE COLUMNS	DOVETAIL ANCHORS AT
AT CONCRETE BEAMS	DOVETAIL ANCHORS AT

5.) ALL SPLICES IN REINFORCING STEEL FOR MASONRY WALLS SHALL BE 48 BAR DIAMETERS UNLESS NOTED OTHERWISE.

6.) MASONRY CONSTRUCTION SHALL BE INSPECTED BY AN INDEPENDANT INSPECTION AGENCY PER THE REQUIREMENTS OF THE LATEST LOCAL APPROVED BUILDING CODE. AS A MINIMUM, THE FOLLOWING INSPECTION SHALL BE PROVIDED AND REPORTS SUBMITTED WITHIN FIVE DAYS:

A. COMPRESSIVE STRENGTH OF MASONRY UNITS AND PROPER PROPORTIONING AND MIXING OF MORTAR

B. SIZE, GRADE AND PLACEMENT OF REINFORCING STEEL

C. GROUTING OPERATION

STEEL:

1.) ALL STEEL JOISTS SHALL CONFORM TO THE SJI STANDARD SPECIFICATIONS IN ALL RESPECTS AND SHALL HAVE BRIDGING IN ACCORDANCE WITH THE SJI SPECIFICATIONS. JOISTS SHALL BE WELDED TO STEEL SUPPORTS PER SJI SPECIFICATIONS. JOISTS SUPPORTED ON STEEL BEAMS, GIRDERS OR BEARING PLATES SHALL HAVE THE JOIST SEAT DESIGNED TO TRANSFER THE LOAD TO THE SUPPORT CENTER LINE UNLESS NOTED OTHERWISE ON PLAN.

2.) NO MECHANICAL EQUIPMENT SHALL BE PLACED ON JOIST WITHOUT THE APPROVAL OF THE ENGINEER. NO EQUIPMENT SHALL BE SUPPORTED FROM THE BOTTOM CHORD OF THE JOIST.

3.) STRUCTURAL STEEL FOR WIDE FLANGE SHAPES SHALL CONFORM TO ASTM SPECIFICATION A992. STRUCTURAL STEEL FOR TUBES SHALL CONFORM TO ASTM SPECIFICATION A500 GRADE B. STRUCTURAL STEEL FOR PIPES SHALL CONFORM TO ASTM SPECIFICATION A53 TYPE E, GRADE B. ALL OTHER STEEL SHALL CONFORM TO ASTM SPECIFICATION A36. MILL TEST REPORTS SHALL BE SUBMITTED TO THE ARCHITECT. ALL STEEL SHALL BE DETAILED, FABRICATED AND ERECTED IN ACCORDANCE WITH THE AISC MANUAL, AISC SPECIFICATION AND AISC CODE OF STANDARD PRACTICE. ALL CONNECTIONS SHALL DEVELOP THE FULL STRENGTH OF THE BEAM. IN GENERAL, FIELD CONNECTIONS SHALL BE MADE WITH 3/4"DIAMETER A325 BOLTS UNLESS OTHERWISE NOTED AND SHOP CONNECTIONS SHALL BE WELDED.

4.) BOLTS, EXCEPT AS NOTED, NEED ONLY BE INSTALLED TO THE "SNUG TIGHT" CONDITION AS DEFINED IN THE RCSC "SPECIFICATION FOR STRUCTURAL JOINTS". BOLTS IN BEAM TO COLUMN CONNECTIONS THAT HAVE SLOTTED HOLES, BOLTS NOTED AS SLIP CRITICAL, AND BOLTS SUBJECT TO DIRECT TENSION SHALL BE FULLY PRE-TENSIONED IN ACCORDANCE WITH THE "SPECIFICATION FOR STRUCTURAL JOINTS" (LATEST LOCAL APPROVED).

5.) WELDS SHALL BE MADE WITH LOW HYDROGEN ELECTRODES.

6.) CONNECTIONS DETAILED BY THE FABRICATOR SHALL MEET THE FOLLOWING REQUIREMENTS:

a.) ALL CONNECTIONS, UNLESS OTHERWISE NOTED, SHALL BE DOUBLE ANGLE, SINGLE ANGLE OR SINGLE PLATE SHEAR CONNECTIONS DESIGNED AND DETAILED IN ACCORDANCE WITH THE AISC MANUAL OF STEEL CONSTRUCTION (LATEST LOCAL APPROVED EDITION). MINIMUM EDGE DISTANCE FOR BOTH BEAMS AND PLATES IN SINGLE PLATE SHEAR CONNECTIONS SHALL BE 1 1/2" AND BOLT SPACING 3".

b.) ALTERNATE CONNECTIONS TO THOSE SPECIFIED ABOVE MAY BE CONSIDERED FOR USE PROVIDED THAT COMPLETE STRUCTURAL COMPUTATIONS AND DETAILS, SIGNED AND SEALED BY A STRUCTURAL ENGINEER REGISTERED IN THE LOCAL JURISDICTION ARE SUBMITTED FOR REVIEW.

7.) ALL GROOVE WELDS SHALL BE FULL PENETRATION GROOVE WELDS IN ACCORDANCE WITH ANSI/AWS D1.1, "STRUCTURAL WELDING CODE" (LATEST LOCAL APPROVED EDITION). THESE WELDS SHALL BE MADE ONLY BY OPERATORS QUALIFIED BY PRESCRIBED TEST IN THE "STRUCTURAL WELDING CODE". ACCEPTANCE SHALL BE SUBJECT TO THE INSPECTION AND REVIEW OF AN INDEPENDENT INSPECTION AGENCY. ALL FULL PENETRATION WELDS SHALL BE ULTRASONICALLY TESTED.

8.) WELDING SEQUENCE AND TECHNIQUE SHALL BE SUCH THAT DISTORTION OF STEEL MEMBERS IS MINIMIZED AND UNDUE DISTORTION IS AVOIDED.

9.) ALL STRUCTURAL STEEL SHALL BE SHOP PAINTED WITH A RUST INHIBITIVE PRIMER.

10.) THE SYMBOL [No.] ADJACENT TO A BEAM OR PORTION OF A BEAM DENOTES THE NUMBER OF 3/4"DIAMETER HEADED STUDS TO BE WELDED TO THE TOP OF THE BEAM OR PORTION OF THE BEAM. STUDS SHALL EXTEND 1 1/2" ABOVE THE DECK AFTER INSTALLATION. THE NUMBER OF STUDS HAS BEEN DETERMINED BY ASSUMING THE SHAPE OF THE METAL DECK CAUSES NO REDUCTION IN THE SHEAR CAPACITY OF THE STUDS. IF REQUIRED, THE TOTAL NUMBER OF STUDS, [No.], SHALL BE INCREASED IN ACCORDANCE WITH AISC SPECIFICATIONS TO ALLOW FOR ANY REDUCTION IN SHEAR CAPACITY DUE TO METAL DECK CONFIGURATION.

11.) FIELD STRUCTURAL STEEL SHALL BE INSPECTED BY QUALIFIED INSPECTORS APPROVED BY THE STRUCTURAL ENGINEER. FIELD INSPECTION REPORTS SHALL BE FILED WITH THE STRUCTURAL ENGINEER WITHIN 5 DAYS OF THE TIME OF ACTUAL INSPECTION. INSPECTORS MUST BE NOTIFIED OF ALL PHASES OF CONSTRUCTION BY THE GENERAL CONTRACTOR.

METAL STUDS:

1.) GALVANIZED STUDS AND JOISTS 12, 14 AND 16 GAGE SHALL BE FORMED FROM STEEL THAT CONFORMS TO ASTM A653, GRADE 50 WITH A MINIMUM YIELD STRENGTH OF 50,000 psi. ALL GALVANIZED 18 AND 20 GAGE STUDS AND JOISTS, AND ALL GALVANIZED TRACK, BRIDGING, END CLOSURES AND ACCESSORIES SHALL BE FORMED FROM STEEL THAT CONFORMS TO THE REQUIREMENTS OF ASTM A653, GRADE 33 WITH A MINIMUM YIELD STRENGTH OF 33,000 psi. METAL STUDS SHALL BE BY DIETRICH INC.,OR EQUIVALENT.

2.) ALL STUDS JOISTS AND ACCESSORIES SHALL BE FORMED FROM STEEL HAVING A G-60 GALVANIZED COATING, MEETING ASTM A653 AND C955.

3.) FRAMING COMPONENTS MAY BE PRE-ASSEMBLED INTO PANELS PRIOR TO ERECTING. PREFABRICATED PANELS SHALL BE SQUARE WITH COMPONENTS ATTACHED IN A MANNER AS TO PREVENT RACKING. HANDLING AND LIFTING OF PREFABRICATED FRAME PANELS SHALL BE DONE IN A MANNER AS NOT TO CAUSE DISTORTION IN ANY MEMBER.

4.) PROVIDE UNIFORM AND LEVEL BEARING SUPPORT FOR THE BOTTOM TRACK.

5.) AT TRACK BUTT JOINTS, ABUTTING PIECES OF TRACK SHALL BE BUTT WELDED OR SPLICED TOGETHER.

6.) STUDS SHALL BE PLUMBED, ALIGNED AND SECURELY ATTACHED TO THE FLANGES OR WEBS OF THE TRACKS. THE ENDS OF THE STUDS MUST BEAR AGAINST THE WEB OR BOTH UPPER AND LOWER TRACKS. PROVIDE SHIMS AND/OR WELD AS REQUIRED TO PROVIDE FULL BEARING.

7.) SPLICES IN AXIALLY LOADED STUDS SHALL NOT BE PERMITTED.

8.) WALL STUD BRIDGING SHALL BE INSTALLED IN A MANNER TO PROVIDE RESISTANCE TO BOTH MINOR AXIS BENDING AND ROTATION. BRIDGING ROWS SHALL BE EQUALLY SPACED NOT TO EXCEED 4'-0"o.c.

9.) TEMPORARY BRACING SHALL BE PROVIDED UNTIL ERECTION OF THE STRUCTURAL SYSTEM IS COMPLETE.

10.) SIZES AND GAGES OF METAL STUDS SHOWN ARE MINIMUM REQUIREMENTS. STUDS SHALL BE DESIGNED FOR THE WIND LOADS REQUIRED BY THE LOCAL BUILDING CODE AND SHALL BE SIGNED AND SEALED BY AN ENGINEER REGISTERED IN THE LOCAL JURISDICTION. FOR BIDDING PURPOSES, PROVIDE MULTIPLE STUDS AT EACH SIDE OF OPENINGS EQUAL TO ONE-HALF OPENING WIDTH DIVIDED BY STUD SPACING.

EXISTING CONSTRUCTION:

1.) COLUMBIA ENGINEERING INC., HAS NOT EXAMINED THE EXISTING CONSTRUCTION. INFORMATION ON THE EXISTING CONSTRUCTION HAS BEEN ATTAINED FROM DRAWINGS S-1 THROUGH S-8 PREPARED BY VKKR PARTNERSHIP. THE CONTRACTOR SHALL INFORM COLUMBIA ENGINEERING INC., IF THE ACTUAL FIELD CONDITIONS DIFFER FROM THAT SHOWN ON THESE DRAWINGS.

MISCELANEOUS:

1.) SHOP DRAWINGS FOR ALL STRUCTURAL ELEMENTS SHOWN ON THE CONTRACT DOCUMENTS MUST BE SUBMITTED BY THE GENERAL CONTRACTOR. IF A CONTRACTOR OR OWNER FAILS TO SUBMIT THE SHOP DRAWINGS, THE FIRM COLUMBIA ENGINEERING INC., WILL NOT BE RESPONSIBLE FOR THE STRUCTURAL CERTIFICATION AND/OR THE DESIGN OF THE PROJECT.

AT THE TIME OF SHOP DRAWING SUBMISSION, THE GENERAL CONTRACTOR SHALL STATE IN WRITING ANY DEVIATIONS OR OMISSIONS FROM THE CONTRACT DOCUMENTS. THE GENERAL CONTRACTOR SHALL REVIEW ALL SHOP DRAWINGS BEFORE SUBMISSION AND MAKE ALL CORRECTIONS AS HE DEEMS NECESSARY AND SHALL CERTIFY ON EACH DRAWING AS FOLLOWS:

"I CERTIFY THAT THE CONTRACT DOCUMENT REQUIREMENTS HAVE BEEN MET AND ALL DIMENSIONS, CONDITIONS, AND QUANTITIES ARE VERIFIED AS SHOWN AND/OR AS CORRECTED ON THIS DRAWING".

SIGNED: _____
(FOR GENERAL CONTRACTOR)

2.) ALL STAIRS, RAILINGS, METAL STUD WALLS AND GLASS STOREFRONT SHALL BE DESIGNED FOR LOADS INDICATED IN THE LOCAL BUILDING CODE. SHOP DRAWINGS AND CALCULATIONS SHALL BE SIGNED AND SEALED BY AN ENGINEER REGISTERED IN THE LOCAL JURISDICTION.

3.) THE BUILDING FRAME IS NOT SELF SUPPORTING UNTIL THE ENTIRE STRUCTURAL SYSTEM HAS BEEN INSTALLED. TEMPORARY BRACING MUST BE PROVIDED BY THE CONTRACTOR TO SUPPORT THE FRAME UNTIL THE STRUCTURAL SYSTEM HAS BEEN COMPLETED.

MISCELLANEOUS CONTINUED:

4.) ALL WORK SPECIFIED HEREIN SHALL BE INSPECTED IN ACCORDANCE WITH THE BUILDING CODE AND ALL LOCAL ORDINANCES. THE OWNER OR CONTRACTOR SHALL HIRE AN EXPERIENCED, QUALIFIED INSPECTOR TO PERFORM ALL THE REQUIRED INSPECTION WORK. THE ENGINEER WILL NOT PERFORM THE REQUIRED INSPECTION AS A PART OF HIS DESIGN SERVICE. THE ENGINEER MAY VISIT THE SITE TO ASCERTAIN GENERAL CONFORMANCE TO THE CONTRACT DOCUMENTS AND SUCH VISITS ARE NOT TO BE CONSTRUED AS MEETING INSPECTION REQUIREMENTS UNLESS THE ENGINEER SPECIFICALLY SO STATES IN WRITING.

LIVE LOADS:

1.) ROOF LOAD

1. MINIMUM DESIGN LOAD = 30 PSF OR GROUND SNOW LOAD AND SNOW DRIFT	
2. GROUND SNOW LOAD (Pg)	25
3. EXPOSURE FACTOR	0.7
4. IMPORTANCE FACTOR	1.0

FLOOR LIVE LOAD

1. FLOORS	100 PSF
2. SLAB ON GRADE	100 PSF
3. STAIRS	100 PSF
4. MECHANICAL ROOM	150 PSF

SEISMIC DATA (EQUIVALENT LATERAL FORCE PROCEDURE)

1. EFFECTIVE PEAK VELOCITY-RELATED ACCELERATION	(Av)<0.05
2. EFFECTIVE PEAK ACCELERATION	(Aa)<0.05
3. HAZARD EXPOSURE GROUP	GROUP II
4. PERFORMANCE CATEGORY	
5. SOIL PROFILE	S3
6. STRUCTURAL FRAMING SYSTEM	LOAD BEARING
7. RESPONSE MODIFICATION FACTOR	3.5
8. DEFLECTION AMPLIFICATION FACTOR	3

WIND LOAD

1. BASIC WIND SPEED	80 MPH
2. IMPORTANCE FACTOR	1.0
3. EXPOSURE	C
4. DESIGN PRESSURE ON MAIN RESISTING ELEMENTS FROM: 0 TO 15 FEET	19.0 PSF
15 TO 20 FEET	20.0 PSF
20 TO 25 FEET	20.5 PSF
25 TO 30 FEET	21.0 PSF
30 TO 40 FEET	21.5 PSF
40 TO 50 FEET	22.5 PSF

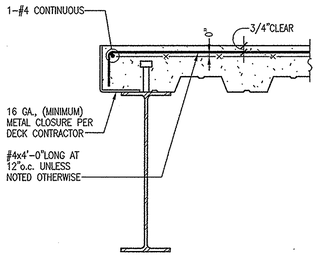

TYPICAL SLAB OPENING AND SLAB PERIMETER

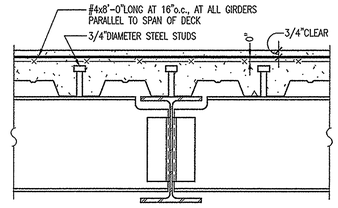

TYPICAL FLOOR BEAM AND GIRDER DETAIL

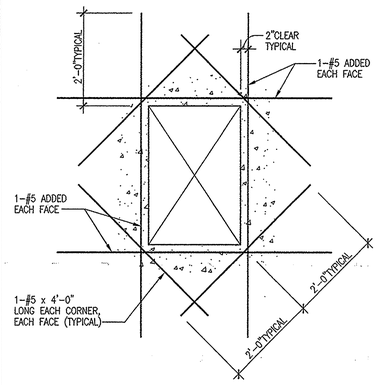

TYPICAL BAR PLACING DETAIL AT OPENINGS IN CONCRETE WALL

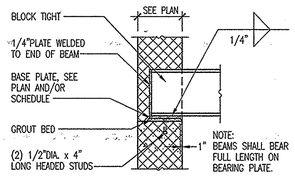

TYPICAL BEAM BEARING ON MASONRY WALL

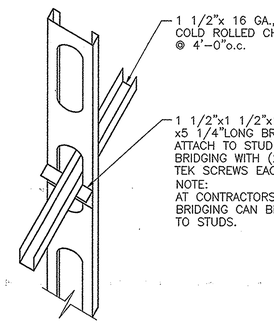

TYPICAL STUD BRIDGING DETAIL

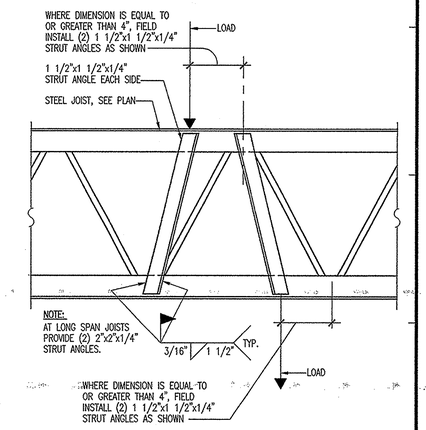

TYPICAL JOIST LOAD STRUT DETAIL

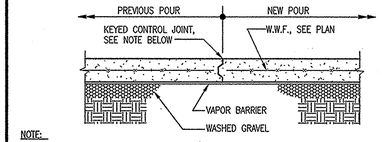

NOTE:
BETWEEN CONSTRUCTION JOINTS, THE CONTRACTOR SHALL PROVIDE SAW CUT CONTROL JOINTS THAT SHALL BE SPACED AS SHOWN ON PLANS AND/OR NOTED IN GENERAL NOTES. SAW CUT JOINTS SHALL BE 1/4 OF THE SLAB THICKNESS IN DEPTH AND SHALL BE CUT AS SOON AS THE CONCRETE IS FIRM ENOUGH NOT TO BE TORN OR DAMAGED BY THE BLADE AND BEFORE RANDOM SHRINKAGE CRACKS CAN FORM IN THE CONCRETE SLAB.

TYPICAL CONSTRUCTION JOINT IN SLAB ON GRADE

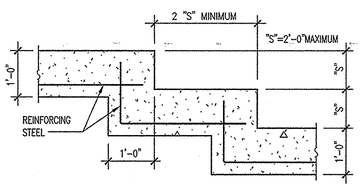

TYPICAL STEP FOOTING DETAIL

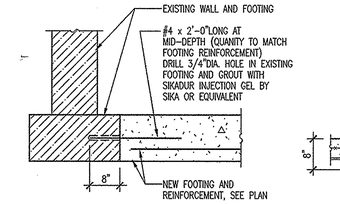

TYPICAL FOOTING AT EXISTING WALL DETAIL

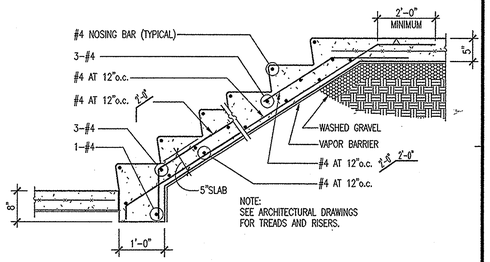

TYPICAL CONCRETE STAIR ON GRADE DETAIL

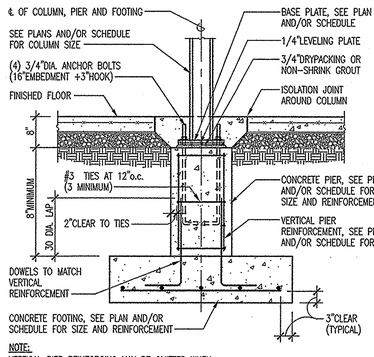

NOTE:
VERTICAL PIER REINFORCING MAY BE OMITTED WHEN DOWELS EXTEND TO WITHIN 2" OF TOP OF PIER.

TYPICAL COLUMN, FOOTING AND PIER DETAIL

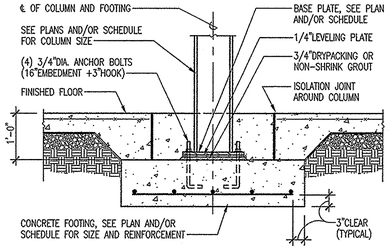

TYPICAL INTERIOR COLUMN DETAIL

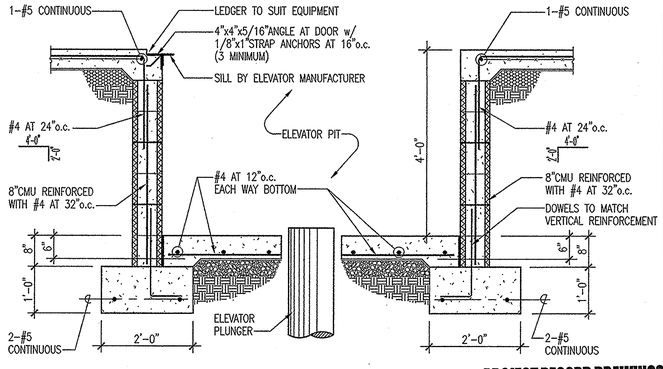

TYPICAL HYDRAULIC ELEVATOR PIT DETAIL

PROJECT RECORD DRAWINGS

Columbia Engineering Inc.
Structural Engineers
6470-A Dobbin Road
Columbia, Maryland 21045
301.621.4015 Wash.Telephone
410.992.5870 Balto.Telephone
410.992.5871 Fax
ENGCE@AOL.COM E-mail

CEI

RECEIVED
OCT 2002

S-30

Grimm and Parker Architects
1355 Beverly Rd.
Suite 105
McLean VA 22101
703.903.9100
703.903.9755 Fax

college of southern maryland

GENERAL NOTES AND TYPICAL DETAILS
COLLEGE OF SOUTHERN MARYLAND WELLNESS CENTER
LA PLATA, MARYLAND

DATE	DESCRIPTION
12/13/01	DESIGN AND DEVELOPMENT
2/8/02	DGS SUBMISSION
4/11/02	BID SET
4/30/03	BID SET

CEI# 21250

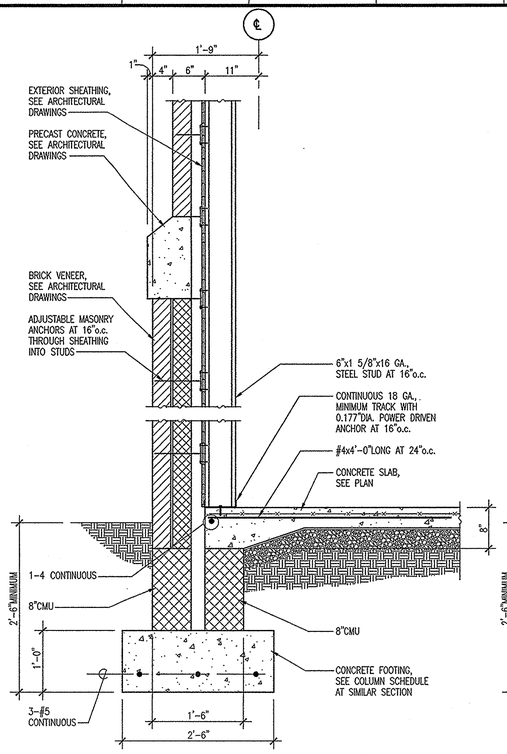

SECTION A
SCALE: 1"=1'-0"
S-3.1

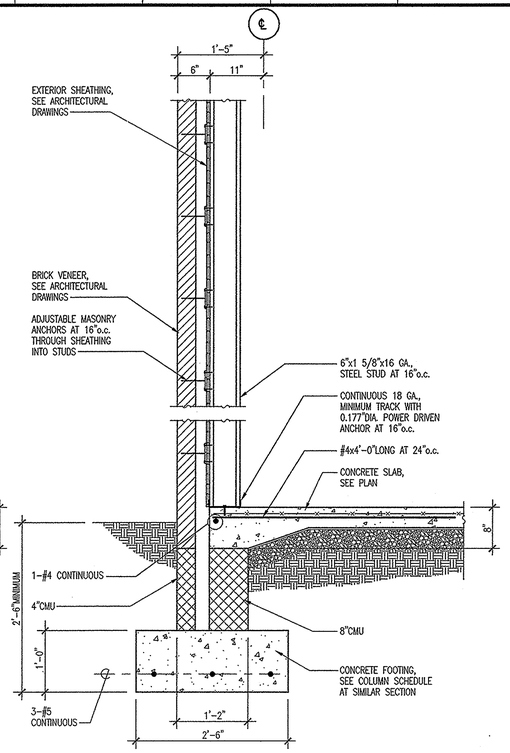

SECTION B
SCALE: 1"=1'-0"
S-3.1

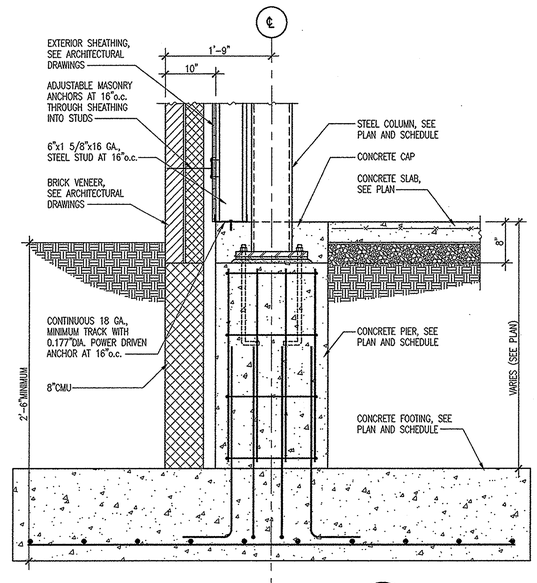

SECTION C
SCALE: 1"=1'-0"
S-3.1

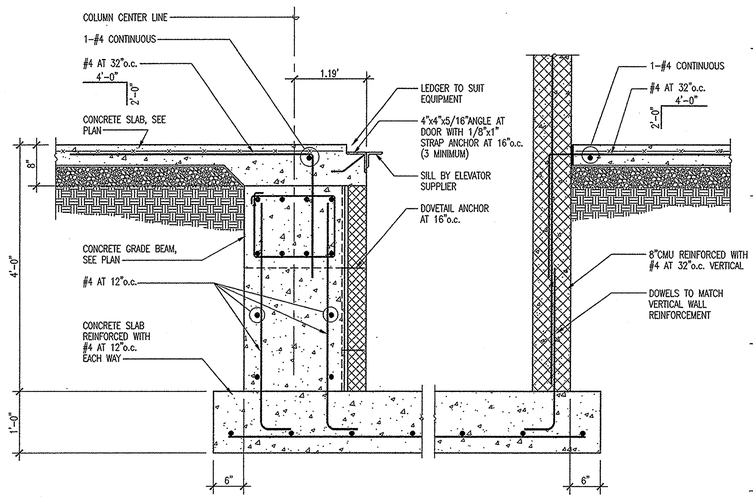

SECTION D
SCALE: 1"=1'-0"
S-3.1

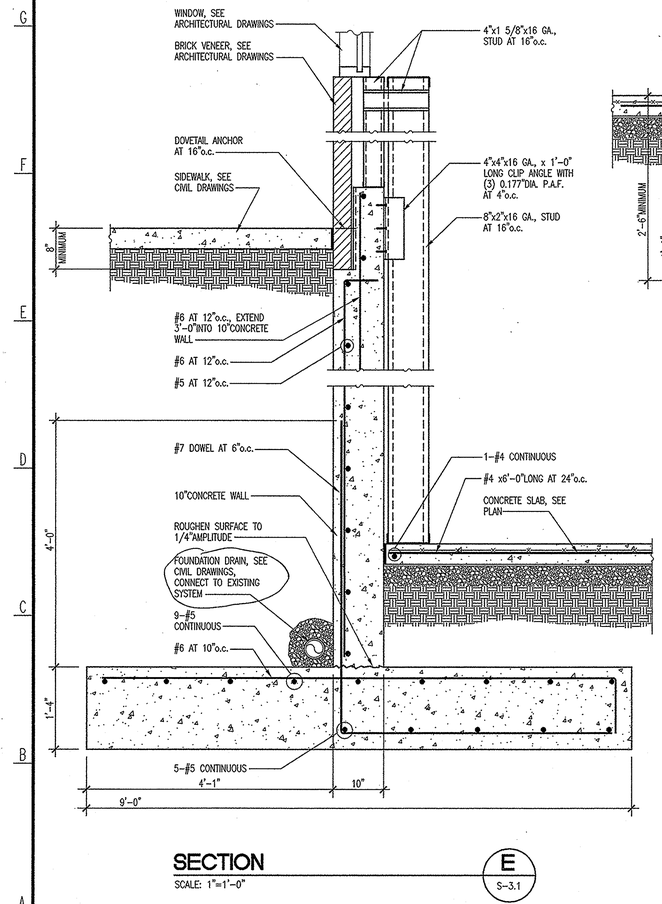

SECTION E
SCALE: 1"=1'-0"
S-3.1

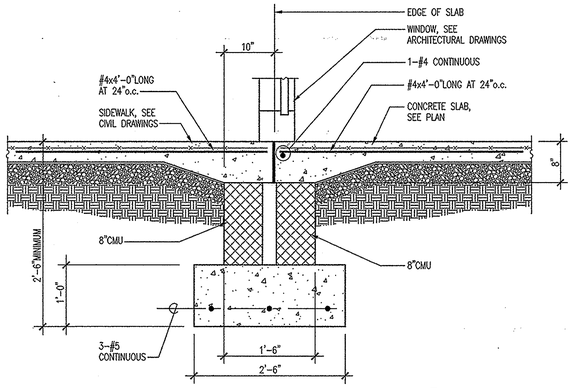

SECTION F
SCALE: 1"=1'-0"
S-3.1

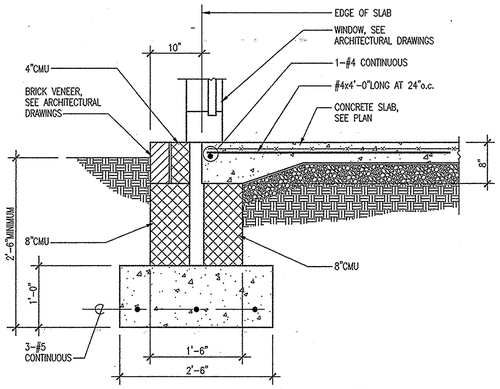

SECTION G
SCALE: 1"=1'-0"
S-3.1

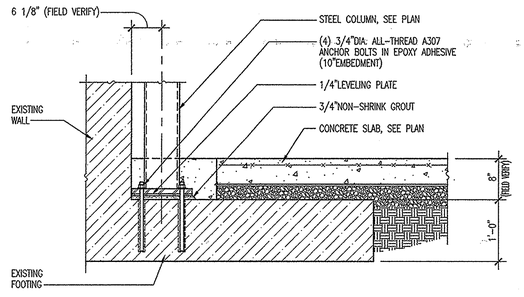

SECTION H
SCALE: 1"=1'-0"
S-3.1

PROJECT RECORD DRAWINGS

College of Southern Maryland
1355 Beverly Rd.
Suite 105
McLean VA 22101
703.903.9100
703.903.9755 Fax

Grimm and Parker Architects

Columbia Engineering Inc.
Structural Engineers
6470-A Dobbin Road
Columbia, Maryland 21045
301.621.4015
410.880.0077
410.992.0827
Wash.Telephone
Balto.Telephone
Fax
E-mail
ENGCEI@AOL.COM

SECTIONS AND DETAILS
COLLEGE OF SOUTHERN MARYLAND WELLNESS CENTER
LA PLATA, MARYLAND

DATE	DESCRIPTION
12/13/01	DESIGN AND DEVELOPMENT
2/8/02	DCS SUBMISSION
4/11/02	BID SET
4/30/03	BID SET

S-3.1

CEI# 21250

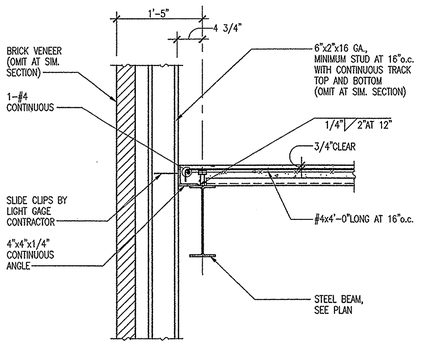

SECTION A
SCALE: 1"=1'-0" — S-3.2

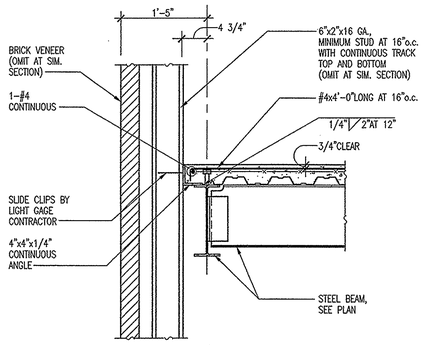

SECTION B
SCALE: 1"=1'-0" — S-3.2

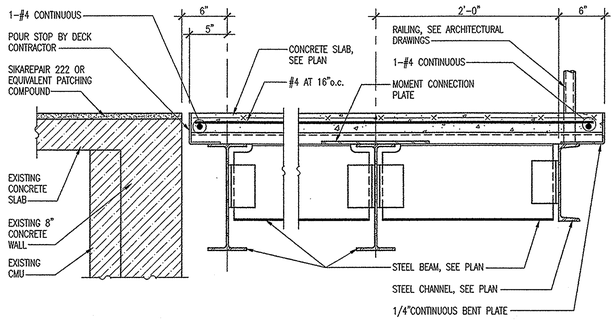

SECTION C
SCALE: 1 1/2"=1'-0" — S-3.2

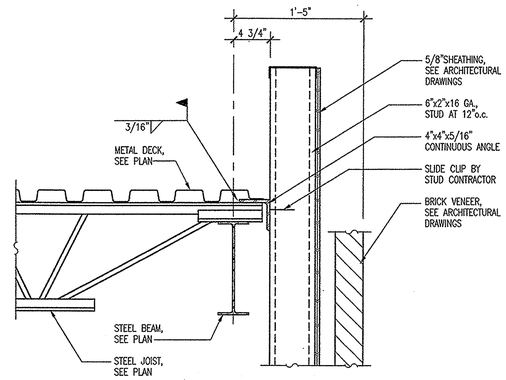

SECTION D
SCALE: 1 1/2"=1'-0" — S-3.2

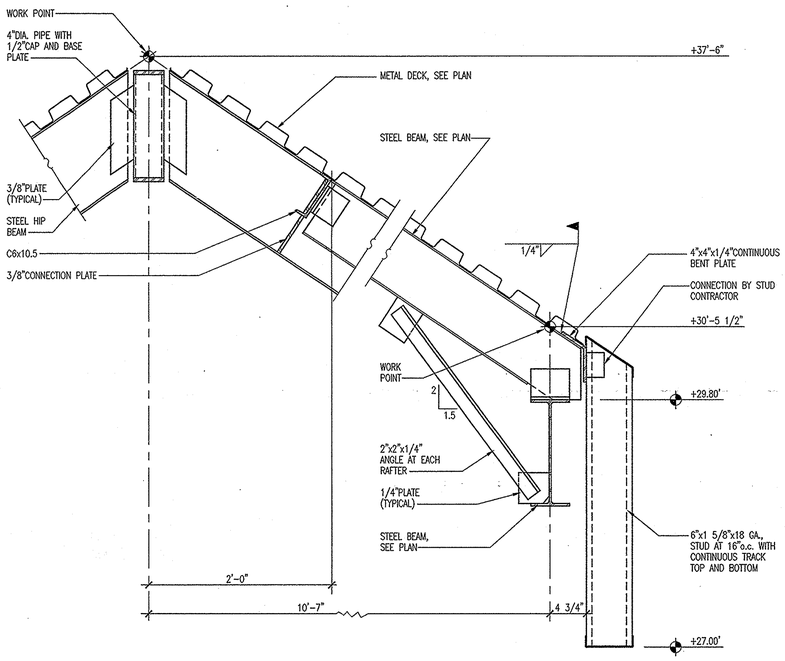

SECTION E
SCALE: 1 1/2"=1'-0" — S-3.2

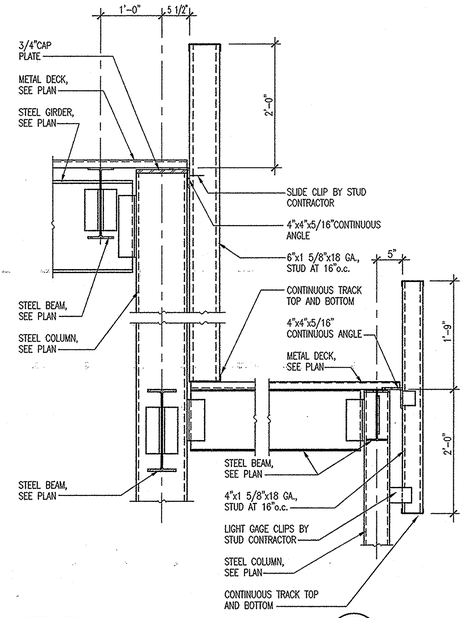

SECTION F
SCALE: 1"=1'-0" — S-3.2

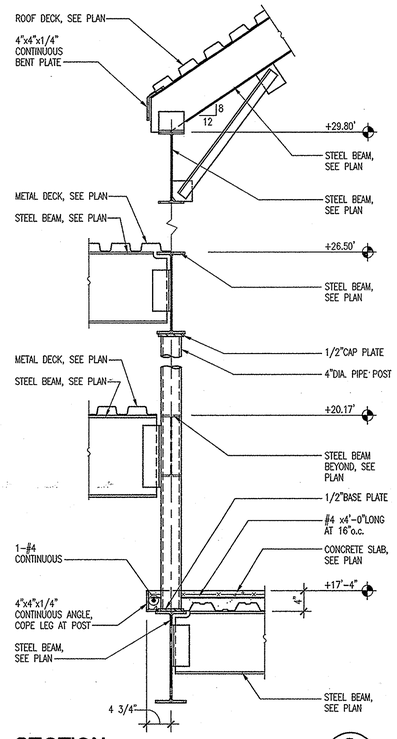

SECTION G
SCALE: 1"=1'-0" — S-3.2

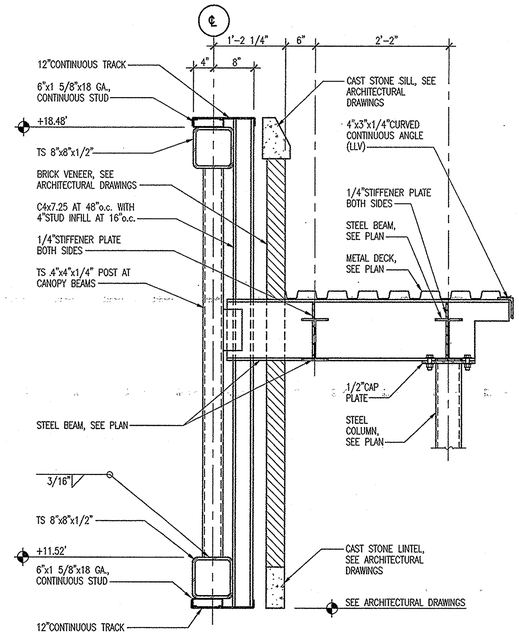

SECTION H
SCALE: 1"=1'-0" — S-3.2

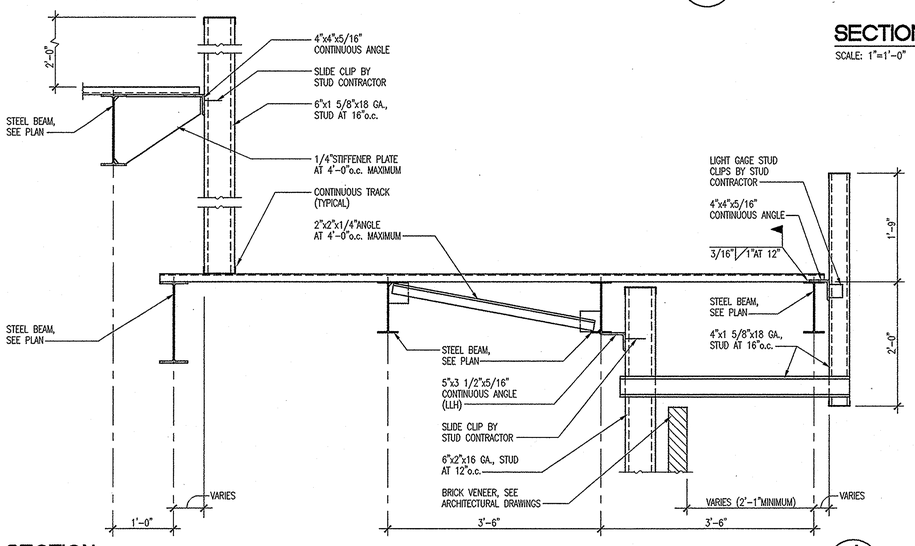

SECTION J
SCALE: 1"=1'-0" — S-3.2

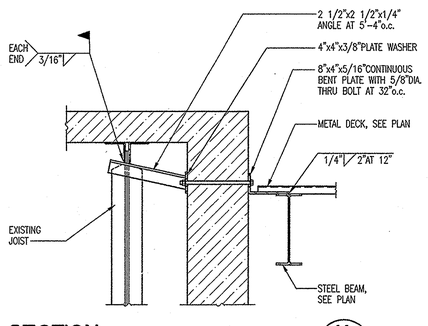

SECTION K
SCALE: 1"=1'-0" — S-3.2

PROJECT RECORD DRAWINGS

OCT 25 2004

CEI# 21250

College of Southern Maryland
Grimm and Parker Architects
1355 Beverly Rd.
Suite 105
McLean VA 22101
703.903.9100
703.903.9755 Fax

SECTIONS AND DETAILS
COLLEGE OF SOUTHERN MARYLAND WELLNESS CENTER
LA PLATA, MARYLAND

DATE	DESCRIPTION
12/13/01	DESIGN AND DEVELOPMENT
2/8/02	DGS SUBMISSION
4/11/02	BID SET
4/30/03	BID SET

Columbia Engineering Inc.
Structural Engineers
6470-A Dobbin Road
Columbia, Maryland 21045
Wash.Telephone 301.621.4015
Balto.Telephone 410.992.9970
Fax 410.992.0627
E-mail ENGCE@AOL.COM

CEI

GENERAL

S-3.2

© GRIMM AND PARKER,P.C. 2001

VICINITY MAP

N.T.S.

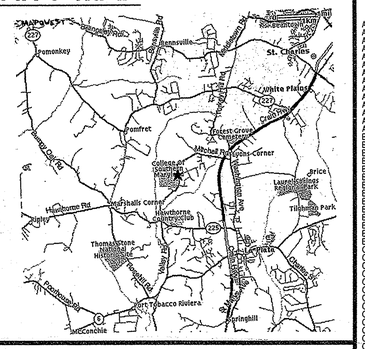
Mitchell Rd
Pomonkey
Hamilton Rd
Ridgeville
Mt Carmel Church Rd
St. Charles
White Plains
Cedarville Rd
Crain Hwy
Pinefret
Forest Grove
Mitchell
Hawthorne
Price
Laurel Grove Park
Tilghman Park
Thomas Stone National Historic Site
Port Tobacco Riviera
Springhill
Mt Carmel Church
Chapel Point
Indian Head Hwy
Port Tobacco River
Mattawoman Creek
Piscataway Creek
Zekiah Swamp Run
Wicomico River
Potomac River
Chicamuxen Creek
Nanjemoy Creek
Mattawoman Creek
Allens Fresh Run
Gilbert Run
Mill Run
Cedar Run

© GRIMM AND PARKER,P.C. 1999

WELLNESS CENTER

COLLEGE OF SOUTHERN MARYLAND
LAPLATA CAMPUS

ELECTION DISTRICT, CHARLES COUNTY, MARYLAND

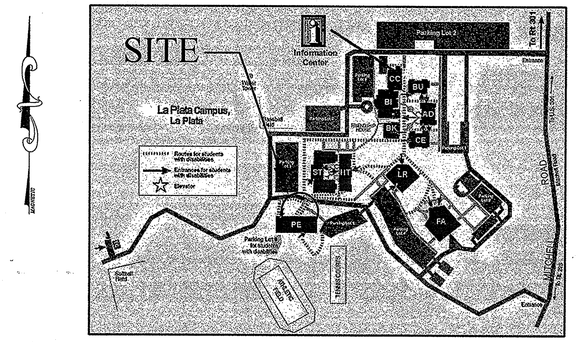

LOCATION PLAN
SCALE: 1" = 400' ±

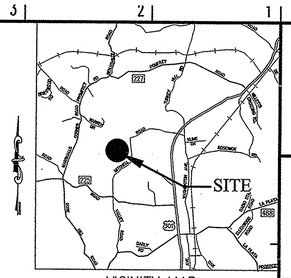

VICINITY MAP
SCALE 1" = 8333'

GENERAL NOTES

A. THE TOPOGRAPHY SHOWN IS BASED UPON A TOPOGRAPHIC SURVEY BY MCCRONE ASSOCIATES (NOT DATED).

B. BENCH MARK DATA: NOT PROVIDED.

C. HORIZONTAL CONTROL BASED ON: NOT PROVIDED.

D. IT IS THE CONTRACTOR'S RESPONSIBILITY TO FIELD VERIFY ACTUAL SITE CONDITIONS PRIOR TO THE START OF ANY WORK. THERE IS NO WARRANTY OR GUARANTEE ON THE COMPLETENESS OR CORRECTNESS OF THE EXISTING CONDITION INFORMATION. ANY DISCREPANCY FOUND SHALL BE BROUGHT TO THE IMMEDIATE ATTENTION OF THE ARCHITECT PRIOR TO THE START OF ANY WORK.

E. THE LOCATION OF EXISTING UNDERGROUND UTILITIES IS SHOWN IN AN APPROXIMATE WAY ONLY. THE CONTRACTOR SHALL BE RESPONSIBLE TO VERIFY THE EXACT LOCATION OF ALL EXISTING UNDERGROUND UTILITIES BEFORE COMMENCING ANY WORK. CONTRACTOR SHALL BE FULLY RESPONSIBLE FOR THE COST OF REPAIR OF ANY AND ALL DAMAGES WHICH OCCUR AS A RESULT OF A FAILURE TO EXACTLY LOCATE AND PRESERVE ANY AND ALL EXISTING UTILITIES TO REMAIN.

F. THE CONTRACTOR SHALL BE RESPONSIBLE FOR NOTIFYING "MISS UTILITY" AT 1-800-257-7777 THREE DAYS PRIOR TO THE START OF ANY EXCAVATION WORK.

G. THE CONTRACTOR SHALL STAKE OUT ALL BASELINES OF CONSTRUCTION, THE LOCATION OF ALL NEW CONSTRUCTION AND VERIFY ALL SETBACKS, OFFSETS, AND CLEARANCES PRIOR TO START OF ANY WORK.

H. THE CONTRACTOR SHALL VERIFY ALL EXISTING UTILITY INVERTS AND CLEARANCES FROM NEW WORK PRIOR TO START OF ANY WORK.

I. ALL DISTURBED AREAS NOT STABILIZED WITH STRUCTURES, PAVING, AND PLANTINGS SHALL BE STABILIZED WITH FOUR INCHES OF TOPSOIL, SEED, MULCH, AND WATER TO ESTABLISH AN ADEQUATE GROWTH OF GRASS.

J. ALL WORK SHALL BE ACCOMPLISHED IN ACCORDANCE WITH THE REQUIREMENTS OF THE SPECIFICATION BOOK.

K. THE TOPS OF ALL FRAMES, GRATES, AND COVERS OF ALL EXISTING UTILITIES WITHIN THE LIMITS OF CONTRACT AND/OR DISTURBANCE SHALL BE ADJUSTED TO THE NEW GRADES.

L. CONTRACTOR SHALL MAINTAIN POSITIVE DRAINAGE AT ALL TIMES.

M. NUMERICAL DIMENSIONS AND ELEVATIONS SHOWN SHALL SUPERSEDE ANY DISCREPANCY IN THE SCALING ON THE DRAWINGS.

CHARLES COUNTY GENERAL NOTES

A. ALL WORK SHALL BE IN ACCORDANCE WITH THE LATEST CHARLES COUNTY DEPARTMENT OF PLANNING AND GROWTH MANAGEMENT STANDARDS AND SPECIFICATIONS FOR CONSTRUCTION MANUAL, THE LATEST CHARLES COUNTY DETAIL MANUAL AND IN ACCORDANCE WITH CURRENT COUNTY ORDINANCES.

B. CONTRACTOR IS RESPONSIBLE FOR CONTRACTING "MISS UTILITY" AT 1-800-257-7777, 48 HOURS PRIOR TO ANY EXCAVATION WORK.

C. CONTRACTOR IS RESPONSIBLE FOR CONTACTING THE CHARLES COUNTY DEPARTMENT OF PLANNING AND GROWTH MANAGEMENT/DEVELOPMENT SERVICES DEPARTMENT 24 HOURS PRIOR TO THE START OF ALL CONSTRUCTION IN ACCORDANCE TO ALL PERMITS ISSUED AT (301) 645-0618.

D. MAXIMUM SLOPES SHALL BE NOT GREATER THAN THREE (3) FEET HORIZONTAL TO ONE (1) FOOT VERTICAL. SLOPES WITHIN THE ROAD RIGHT-OF-WAY SHALL BE NOT GREATER THAN TWO (2) FEET HORIZONTAL TO ONE (1) FOOT VERTICAL, OR AS SPECIFIED IN THE COUNTY ROAD ORDINANCE.

E. CERTIFIED COMPACTION TESTS ARE REQUIRED FOR ALL TRENCH/FILL WORK ON SITE IN ACCORDANCE WITH SECTION 5.3 AND 7.9 OF THE CURRENT CHARLES COUNTY GRADING AND SEDIMENT CONTROL ORDINANCE. IN ADDITION, EARTH WORK SHALL BE PLACED AND COMPACTED TO A POINT AT LEAST THREE (3) FEET ABOVE THE TOP OF THE WATER, SEWER, AND STORM DRAIN LINES BEFORE CONSTRUCTION OF, OR EXCAVATION FOR, WATER, SEWER, OR STORM DRAIN LINES AND/OR IN ACCORDANCE WITH THE LATEST EDITION OF THE CHARLES COUNTY STANDARDS & SPECIFICATIONS FOR CONSTRUCTION . FINAL REPORTS AND CERTIFICATIONS SHALL BE PROVIDED PRIOR TO RELEASE OF BONDS.

F. CONTRACTOR SHALL SUBMIT A CONFINED SPACE ENTRY PLAN TO THE COUNTY W/S ENGINEER PRIOR TO ENTERING ANY MANHOLES OR VAULTS.

LEGEND

DESCRIPTION	EXISTING	NEW	TO BE REMOVED
BUILDING	EX. BLDG.	NEW BLDG.	
PAVING	EX. PAVING	LIGHT	
CONCRETE WALK	CONC. WALK		
CONC. CURB AND GUTTER			
STORM DRAIN	D		D
SANITARY	SS		
WATER	W		
VALVE			
HYDRANT			
MANHOLE			
INLET			
CLEANOUT			
CONTOUR	111 / 110	111 / 110	
SPOT ELEVATION	x110.00	+ 110.00	
FENCE	X		
TREE			
WOODS			
PROPERTY LINE			
LIMIT OF DISTURBANCE	LOD		

INDEX OF DRAWINGS

T-1.1 TITLE SHEET
C-2.1 DEMOLITION AND LAYOUT PLAN
C-2.2 GRADING AND UTILITY PLAN
C-2.3 UTILITY PROFILES
C-3.1 LANDSCAPE PLAN
C-4.1 EROSION AND SEDIMENT CONTROL PLAN AND DETAILS
C-4.2 SEDCON NOTES
C-5.1 SITE DETAILS
C-5.2 BAYSAVER DETAIL SHEET

ENGINEER'S CERTIFICATION
I HEREBY CERTIFY THAT THE DEVELOPMENT PLAN AND THE SEDIMENT CONTROL PLAN ACCURATELY REFLECT EXISTING FIELD CONDITIONS, SHOWS ALL PROPOSED WORK AND MEETS THE REQUIREMENTS, STANDARDS AND SPECIFICATIONS OF THE CHARLES SOIL CONSERVATION DISTRICT, AND THE CHARLES COUNTY DEPARTMENT OF PLANING GROWTH MANAGEMENT.

MD # _____ DATE _____

REVIEW CERTIFICATION

THIS PLAN HAS BEEN REVIEWED FOR THE CHARLES SOIL CONSERVATION DISTRICT AND MEETS THE TECHNICAL REQUIREMENTS OF THE DISTRICT:

CSDA SOIL CONSERVATION SERVICE _____ DATE _____

ENGINEER'S CERTIFICATION:

I HEREBY CERTIFY THAT THE DEVELOPMENT PLAN, STORM DRAINAGE/STORMWATER MANAGEMENT IS IN ACCORDANCE WITH THE CHARLES COUNTY STORMWATER MANAGEMENT ORDINANCE.

_____ DATE: _____

MD. #

APPROVAL

SED. No. 19-04 (rt-3) IS APPROVED FOR SEDIMENT AND EROSION CONTROL WITH AN EXPIRATION DATE OF APRIL 30, 2004.

CHARLES SOIL CONSERVATION DISTRICT _____ DATE _____

REQUEST FOR EXTENSION MUST BE SUBMITTED IN WRITING TO THE DISTRICT.

OWNER'S/DEVELOPER'S CERTIFICATION
"I/WE HEREBY CERTIFY THAT ALL CLEARING, GRADING, CONSTRUCTION AND/OR DEVELOPMENT WILL BE DONE PURSUANT TO THIS PLAN AND THAT ANY RESPONSIBLE PERSONNEL INVOLVED IN THE CONSTRUCTION PROJECT WILL HAVE A CERTIFICATE OF ATTENDANCE AT A MARYLAND DEPARTMENT OF THE ENVIRONMENT APPROVED TRAINING PROGRAM FOR THE CONTROL OF SEDIMENT AND EROSION BEFORE BEGINNING THE PROJECT. I HEREBY AUTHORIZE THE RIGHT OF ENTRY FOR PERIOD ON-SITE EVALUATION BY THE STATE OF MARYLAND DEPARTMENT OF THE ENVIRONMENT, COMPLIANCE INSPECTORS."

_____ DATE _____ OWNER/DEVELOPER SIGNATURE

_____ CARD NO. _____ PRINTED NAME AND TITLE

CHARLES COUNTY GOVERNMENT
Department of Planning and Growth Management
Development Services Department

APPROVED FOR:	*signatures*	construction *date*	as-builts *date*	as-builts *initials*
FLOODPLAINS		/ /	/ /	
GRADING		/ /	/ /	
ROADS		/ /	/ /	
STORM DRAINAGE		/ /	/ /	
STORM WATER MANAGEMENT		/ /	/ /	
WATER & SEWER		/ /	/ /	
OTHER		/ /	/ /	

Conditions and/or Remarks:
This approval expires two years from the date of issuance. Request of extensions must be made in writing and received by the development services department before the expiration date.

EXPIRATION DATE / /

Rev. No.	CONSTRUCTION REVISION	

1355 Beverly Road
Suite 105
McLean VA 22101
703.903.9100
703.903.9755 Fax

Grimm and Parker Architects

TITLE SHEET
COLLEGE OF SOUTHERN MARYLAND WELLNESS CENTER
LA PLATA, MARYLAND

DATE	DESCRIPTION
4/30/03	BID SET

ENGINEERS:
Consulting Engineers
6715 Whittier Avenue 3rd Floor (703) 288-9550
Mc Lean, Virginia 22101 (703) 288-9555 (FAX)
WHITNEY, BAILEY, COX & MAGNANI, LLP

PGM # VC 02-0028

DRAWING:
PROJECT RECORD DRAWINGS

Design: C.K./K.H./S.S.
Draft: K.D./C.S. DATE: 02/05/02 DWG #:
Checked: C.K./J.K. SCALE:

© GRIMM AND PARKER,P.C. 1999

OCT 25 2004
CHECKED

04/11/02
BID SET